Jn. Witwaters- 312/2000 E 1/1/2/1994

HITACHI

CIRCUIT DIAGRAMS

FOR THE

MODEL X-650 SCANNING ELECTRON MICROANALYZER

MODEL S-520 SCANNING ELECTRON MICROSCOPE

Hitachi, Ltd. Tokyo Japan

Part No. 535-8600-3

YM-G(HTT-OH)

TABLE OF CONTENTS

1. X-650/S-520

1.1 WIRING DIAGRAM

1.2 GND WIRING DIAGRAM

1.3 DC POWER SUPPLY

1.4 POWER DISTRIBUTER

1.5 MOTHER BOARD WIRING (1)

1.6 " (2)

1.7 ROM BOARD

1.8 INT VECT BOARD

1.9 PANEL INTERFACE (No. 1) (MFG. No 36-01~03)

1.10 " (No. 2) (" 36-04 ONLY)

1.11 " (No. 3) (" 36-05 ~)

1.12 OPERATION PANEL

1.13 SIGNAL SELECTOR

1.14 SWEEP GENERATOR

1.15 MODE CONTROL

1.16 SDM CONTROL

1.17 VIDEO CONTROL

1.18 DATA DISPLAY

1.19 LENS/HV CONTROL

1.20 DEF/LENS POWER SUPPLY (1)

1.21 " (2)

1.22 VIDEO AMP

1.23 VIEW CRT UNIT

1.24 PHOTO CRT UNIT

1.25 PC-07-01

1.26 40KV HV POWER SUPPLY

1.27 10KV HV POWER SUPPLY

2. EXCLUSIVE FOR X-650

2.1 DISPLAY-COLUMN WIRING DIAGRAM

2.2 EVAC SEQUENCE WIRING DIAGRAM

2.3 EVAC SEQUENCE (1)

2.4 " (2)

3. EXCLUSIVE FOR S-520

3.1 DISPLAY-COLUMN WIRING DIAGRAM (1)

3.2 " (2)

3.3 EVACUATING SEQUENCE

4. OPTIONAL ACCESSORIES

4.1 S-6501 DATA ENTRY KEY BOARD

4.2 S-6504 X-RAY IMAGE UNIT

4.3 S-6509 RASTER ROTATION/DYNAMIC FOCUS UNIT

4.4 S-6540 UNIVERSAL VIDEO AMP UNIT

4.5 S-6541 DUAL PMHV UNIT

4.6 S-6542 PRE AMP UNIT

4.7 RS-200 RADIATION ANALYZING SYSTEM

4.7.1 HT-BOX, SIG. BOX

4.7.2 PRE. AMP

4.7.3 S-6091 X-RAY MEASURING UNIT

4.8 SPECTROMETER CONTROLLER

4.8.1 PULSE MOTOR DRIVER

4.8.2 "

4.8.3 SPECTROMETER CONTROL UNIT

4.9 S-6529 AUTOMATIC CRYSTAL EXCHANGE UNIT

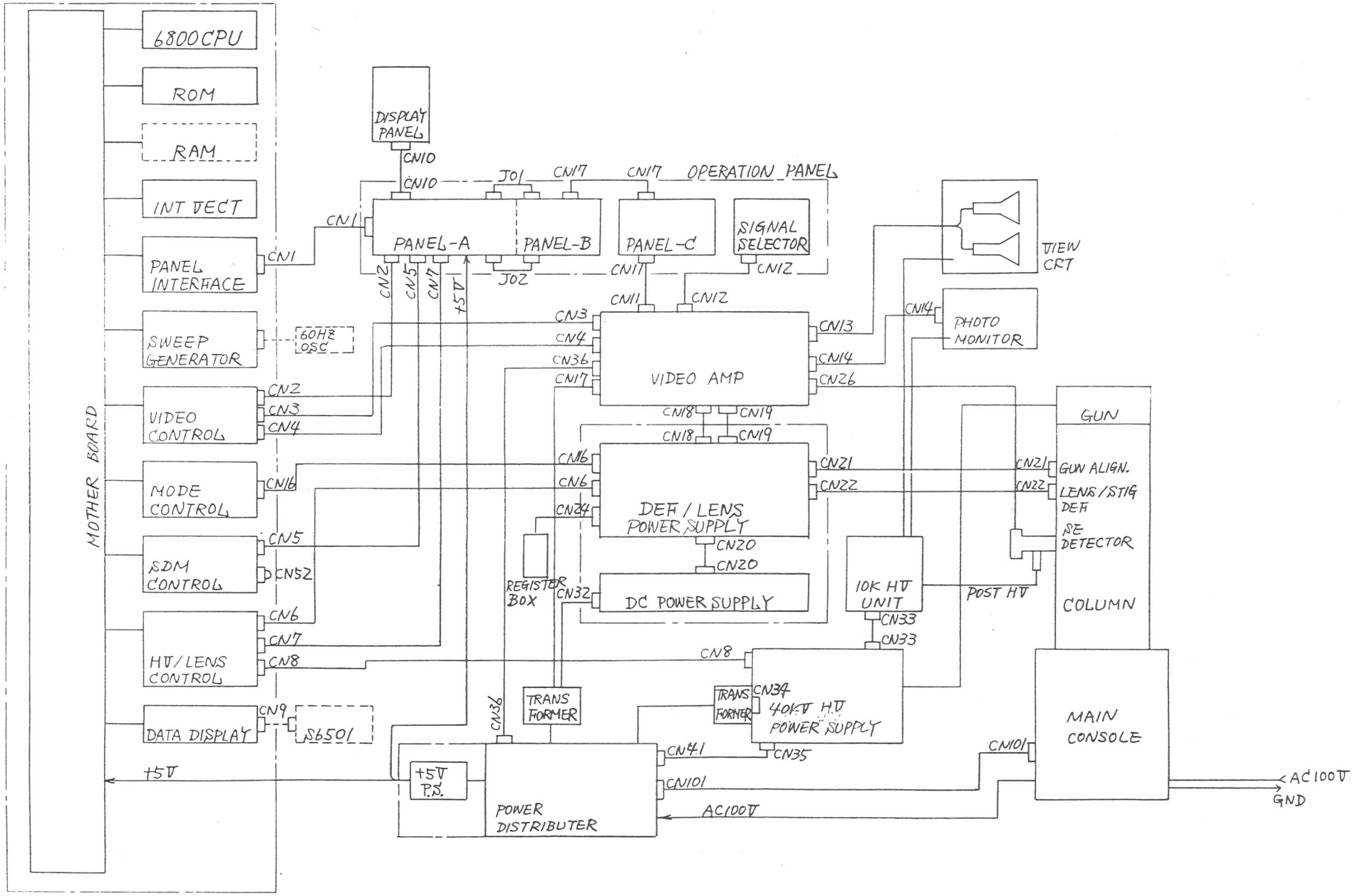

1.1 WIRING DIAGRAM

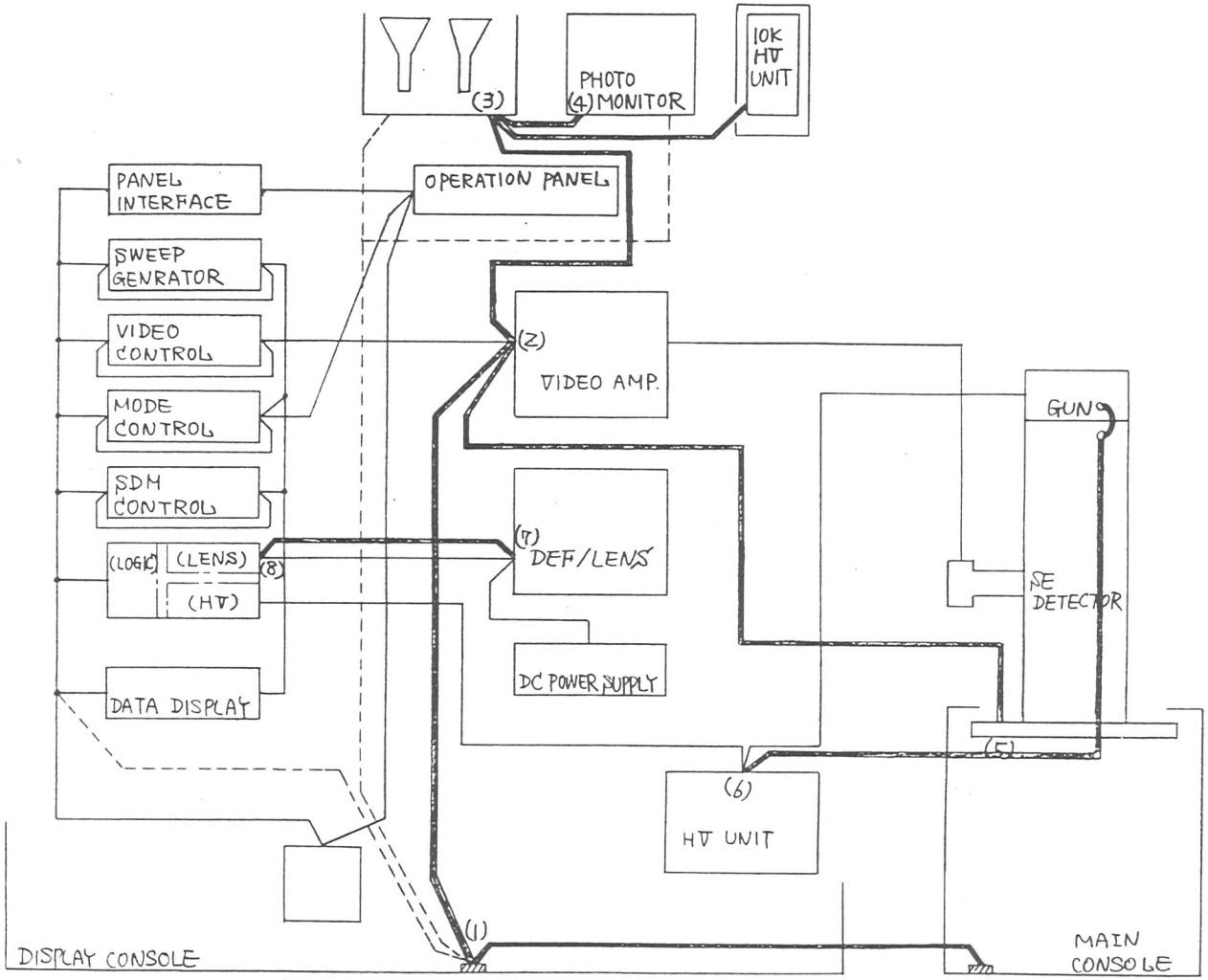

回路内，コード ニヨル接続
INCIRCUIT GND. CONNECTION

単独アース線 ニヨル接続
INDIVIDUAL GND. WIRE

シャーシ接触 ニヨル接続
SHASSI CONTACT

( )内数字は、アース線) 端子NOヲ示ス
NUMBERS IN ( ) ARE TERMINAL NO OF GND WIRES

1.2 GND WIRING DIAGRAM

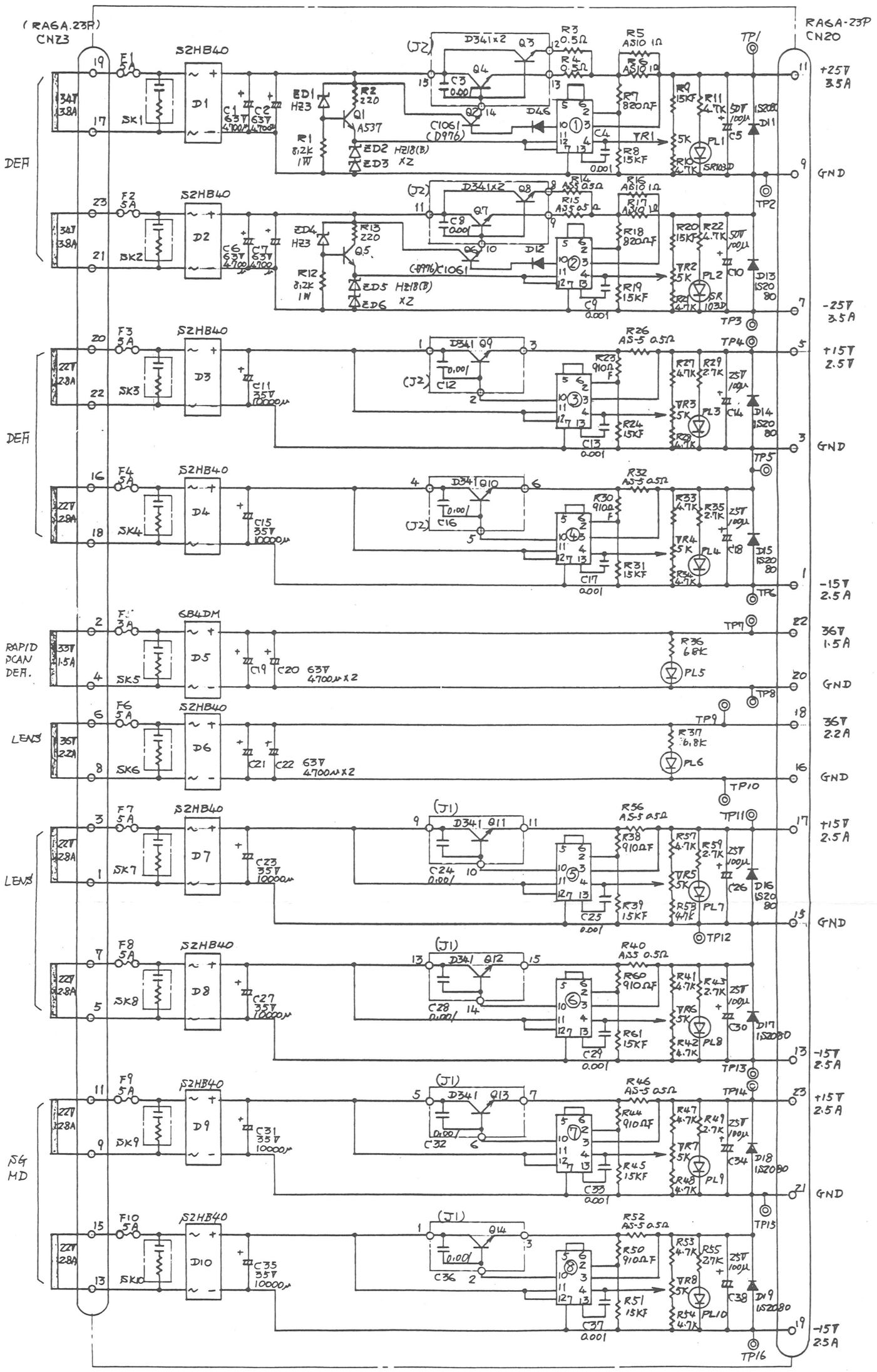

IC 1~8 : HA17723 / μA723

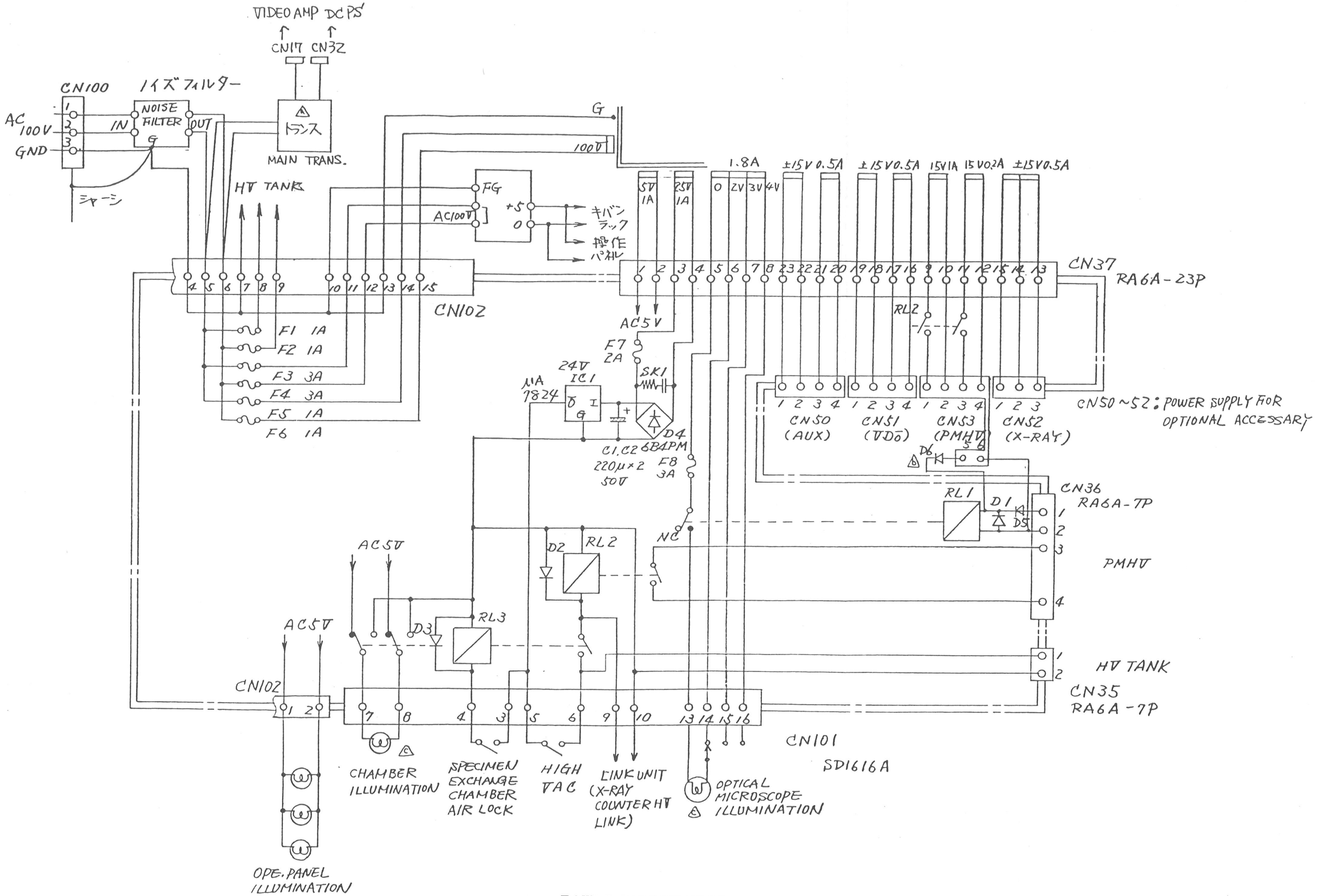

1.4 POWER DISTRIBUTER

1.5 MOTHER BOARD WIRING (1)

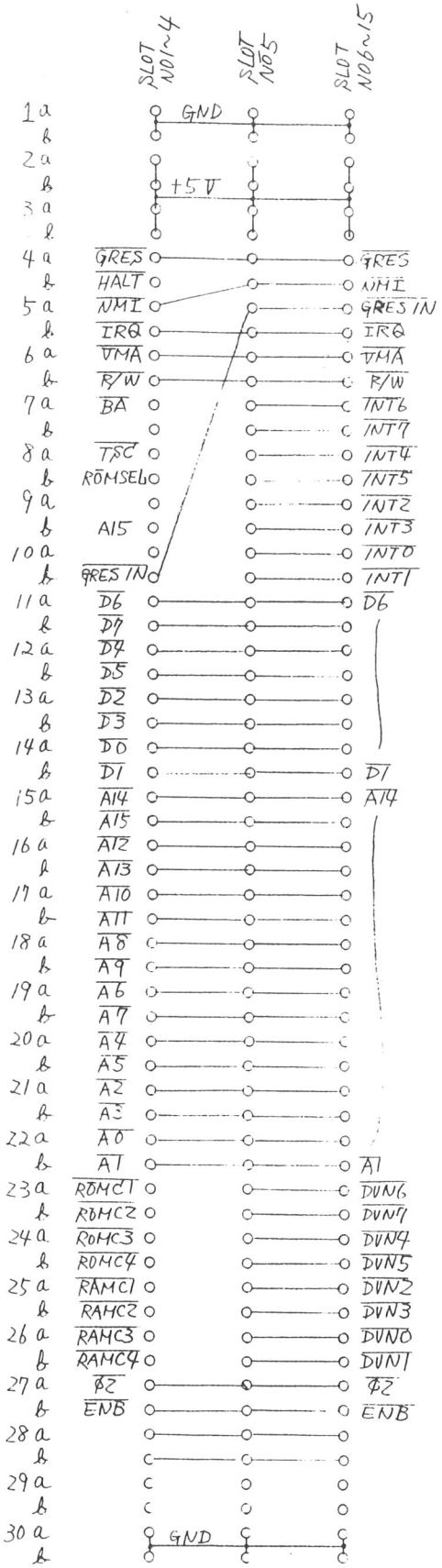

DIGITAL BUS LINES

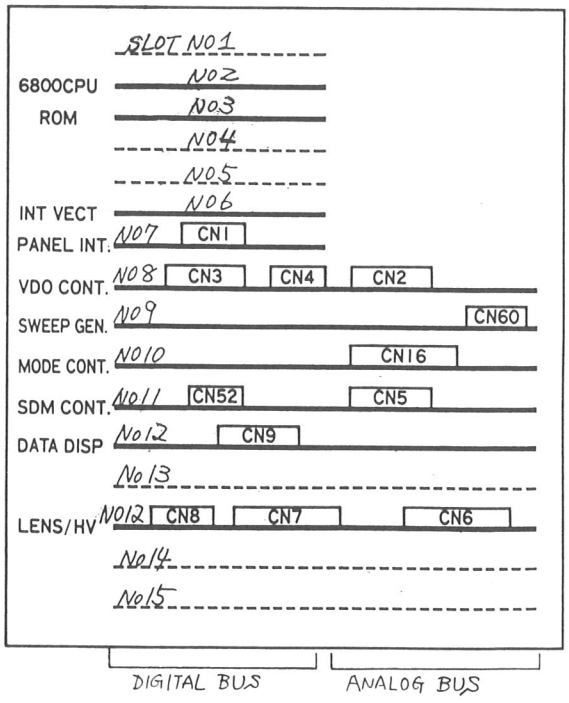

P.C.B AND CONNECTOR ARRANGEMENT

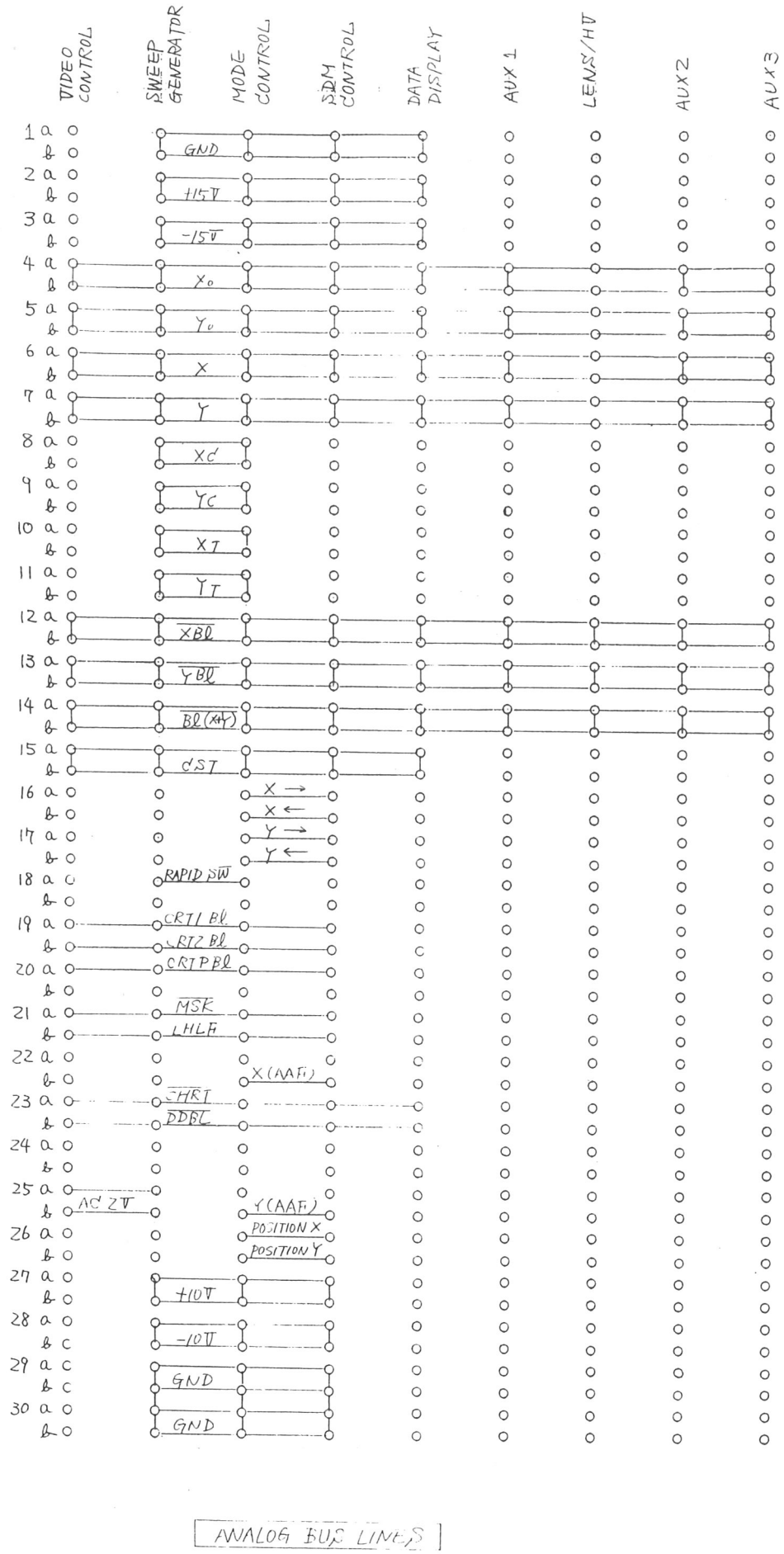

1.6 MOTHER BOARD WIRING (2)

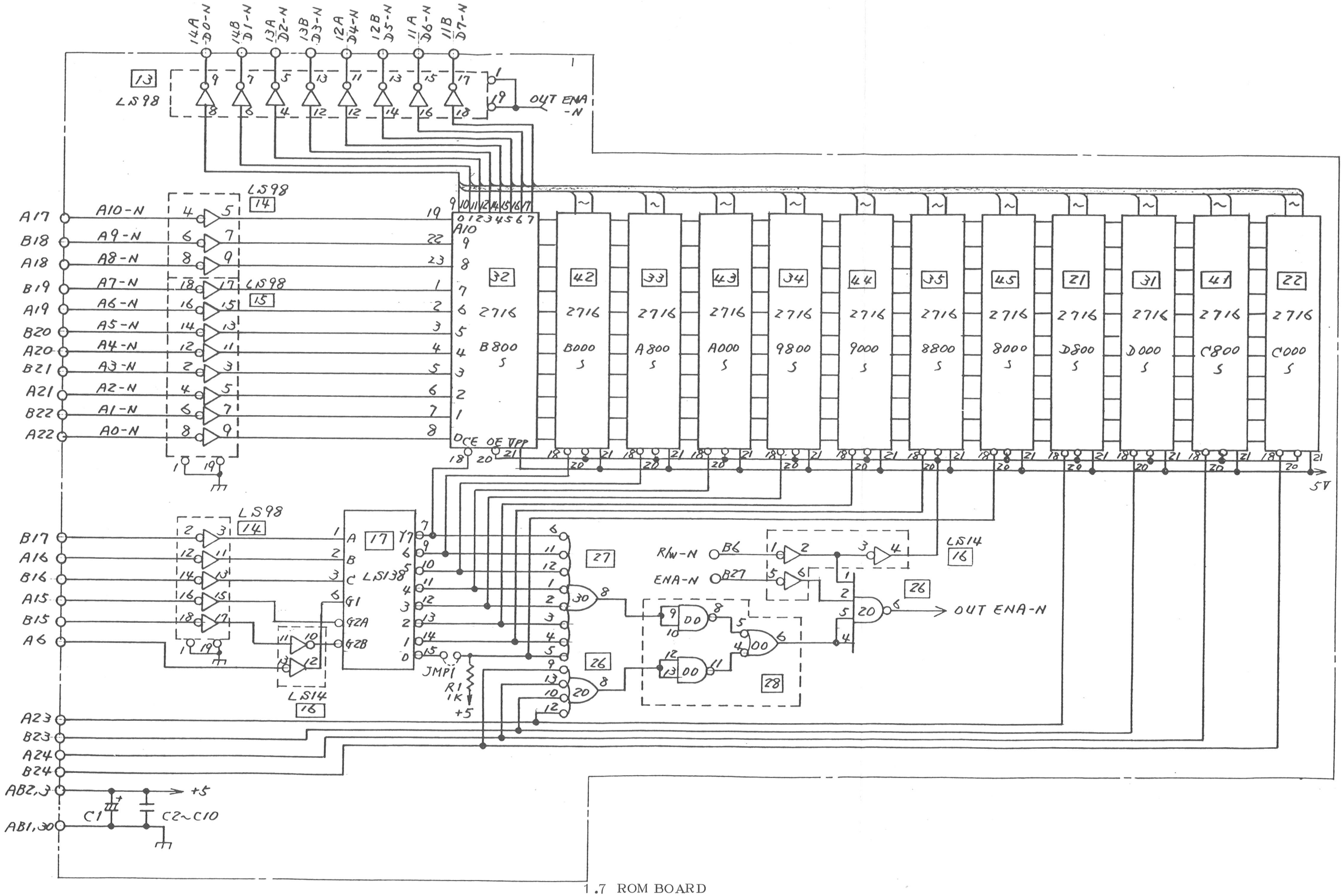
14A -D0-N
14B D1-N
13A D2-N
13B D3-N
12A D4-N
12B D5-N
11A D6-N
11B D7-N
13
LS98
OUT ENA -N
LS98
14
A17
B18
A18
B19
A19
B20
A20
B21
A21
B22
A22
A10-N
A9-N
A8-N
A7-N
A6-N
A5-N
A4-N
A3-N
A2-N
A1-N
A0-N
LS98
15
A10
DCE OE Vpp
32
42
33
43
34
44
35
45
21
31
41
22
2716
B800 S
B000 S
A800 S
A000 S
9800 S
9000 S
8800 S
8000 S
D800 S
D000 S
C800 S
C000 S
5V
B17
A16
B16
A15
B15
A6
LS98
14
LS138
17
G1
G2A
G2B
LS14
16
JMP1
R1 1K
+5
27
26
28
R/W-N
B6
ENA-N
B27
LS14
16
26
OUT ENA-N
A23
B23
A24
B24
AB2,3
AB1,30
C1
C2~C10
+5

1.7 ROM BOARD

JMP WIRING

1) DEVICE 0~7 (X'8008~)
2) " 8~15 (X'8048~)

INT0 (A10) R8 1K +5V — 7486 IC14 — DT0-P — INT0-P
INT1 (B10) R7 1K +5V — IC14 — DT1-P — INT1-P
INT2 (A9) R6 1K +5V — IC13 — DT2-P — INT2-P
INT3 (B9) R5 1K +5V — IC13 — DT3-P — INT3-P
INT4 (A8) R4 1K +5V — 7486 IC12 — DT4-P — INT4-P
INT5 (B8) R3 1K +5V — IC12 — DT5-P — INT5-P
INT6 (A7) R2 1K +5V — IC11 — DT6-P — INT6-P
INT7 (B7) R1 1K +5V — IC11 — DT7-P — INT7-P
INTCLR-N
GRES-N
7474 x 4

IC31 LS98 — DT0 (A14), 1 (B14), 2 (A13), 3 (B13), 4 (A12), 5 (B12), 6 (A11), DT7 (B11) — WO-N
DT0~7-P
IC32 74175 — INT0-P ~ INT3-P
IC33 74175 — INT4-P ~ INT7-P
GRES-N
IM0~7-P
INTL0-N
1
2
INTL3-N
7430
IC44 7405 — INT (B5) — +5V

IC41 LS98 — R9 2.2K +5V — "1" — WI-N — R1-N
IC43 74148 — E0, E1
INTL3-N
2
1
INTL0-N

IC62 LS98 — AD2 (A21), 1 (B22), AD0 (A22), ENA (B27), VMA (A6), R/W (B6), GRES (A4), WI-N
AD2-P
1
AD0-P
ENA-P
VMA-P
R-P
GRES-N
INTCLR-N
7437

IC63 LS138
ENA-P — G1
DTNI-N — G2A
AD2-P — G2B — R1-N (X'8009) — R0-N (X'8008)
R-P — C
AD1-P — B — WI-N (X'8009)
AD0-P — A — WO-N (X'8008)

IC61 LS98 — AD15 (B15), AD14 (A15), AD13 (B16), AD12 (A16), AD11 (B17), AD10 (A17), AD9 (B18), AD8 (A18), AD7 (B19), AD6 (A19), AD5 (B20), AD4 (A20), AD3 (B21), DTNI-P
VMA-P
IC51 LS97
52 7430
IC71 LS138
IC42 LS98
IM0-P — DT0-N
IM7-P — DT7-N
RO-N
DTNI-N
DTN7 (B23), 6 (A23), 5 (B24), 4 (A24), 3 (B25), 2 (A25), 1 (B26), DTN0 (A26)

1.8 INT VECT BOARD

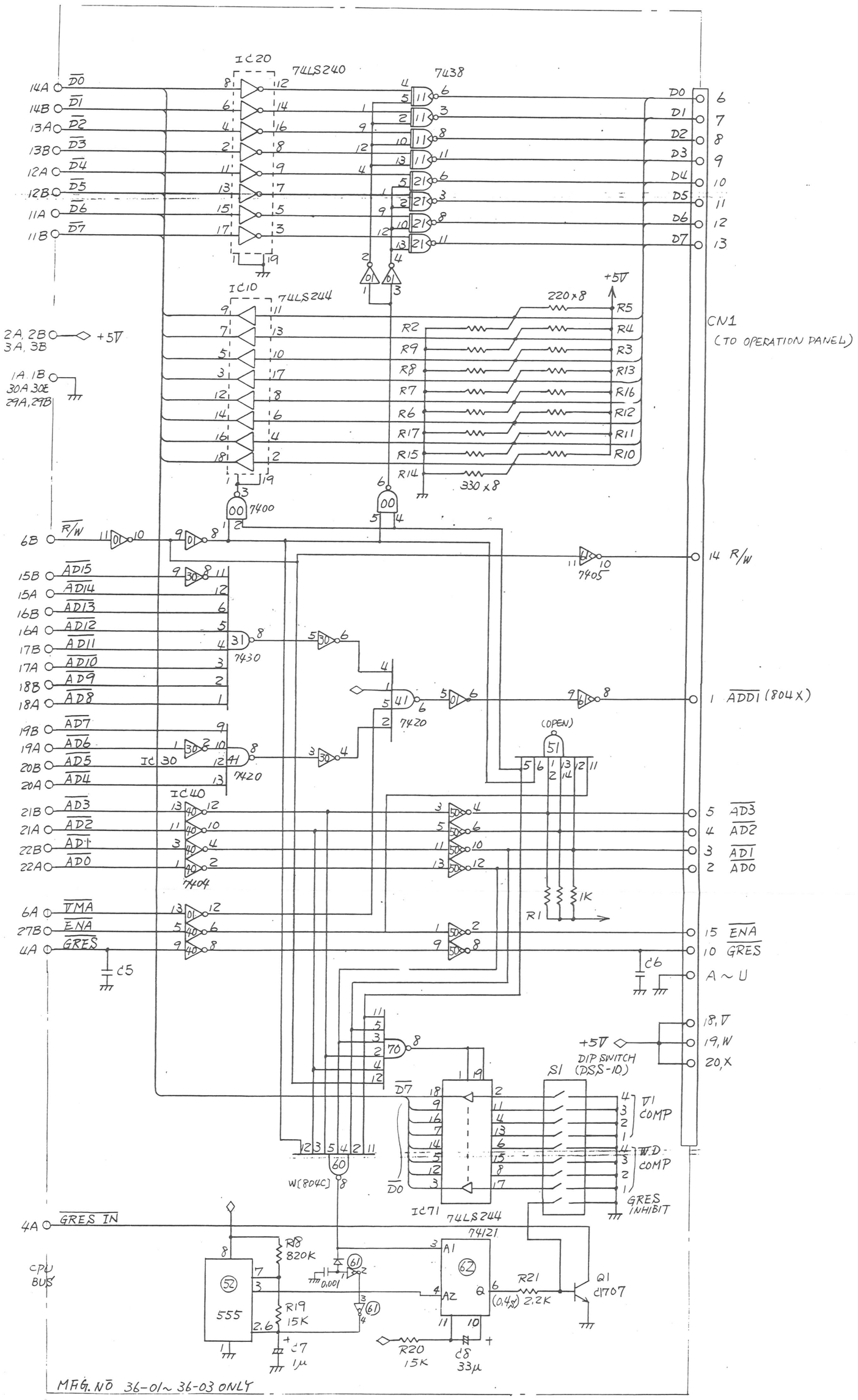
IC20
74LS240
7438
14A D0
14B D1
13A D2
13B D3
12A D4
12B D5
11A D6
11B D7
D0 6
D1 7
D2 8
D3 9
D4 10
D5 11
D6 12
D7 13
IC10
74LS244
+5V
220×8
R5
R4
R3
R13
R16
R12
R11
R10
R2
R9
R8
R7
R6
R17
R15
R14
330×8
CN1
(TO OPERATION PANEL)
2A, 2B
3A, 3B
+5V
1A, 1B
30A, 30E
29A, 29B
7400
6B R/W
14 R/W
7405
15B AD15
15A AD14
16B AD13
16A AD12
17B AD11
17A AD10
18B AD9
18A AD8
19B AD7
19A AD6
20B AD5
20A AD4
7430
7420
1 ADDI (804X)
(OPEN)
IC40
21B AD3
21A AD2
22B AD1
22A AD0
7404
5 AD3
4 AD2
3 AD1
2 AD0
1K
R1
6A VMA
27B ENA
4A GRES
15 ENA
10 GRES
C5
C6
A ~ U
18, V
19, W
20, X
+5V
DIP SWITCH
(DSS-10)
S1
V1 COMP
W.D COMP
GRES INHIBIT
D7
D0
W[804C]
IC71
74LS244
4A GRES IN
74121
CPU BUS
R8
820K
R19
15K
555
0.001
C7
1μ
R20
15K
C8
33μ
R21
2.2K
(0.4W)
Q1
2I707
MFG. NO 36-01~ 36-03 ONLY

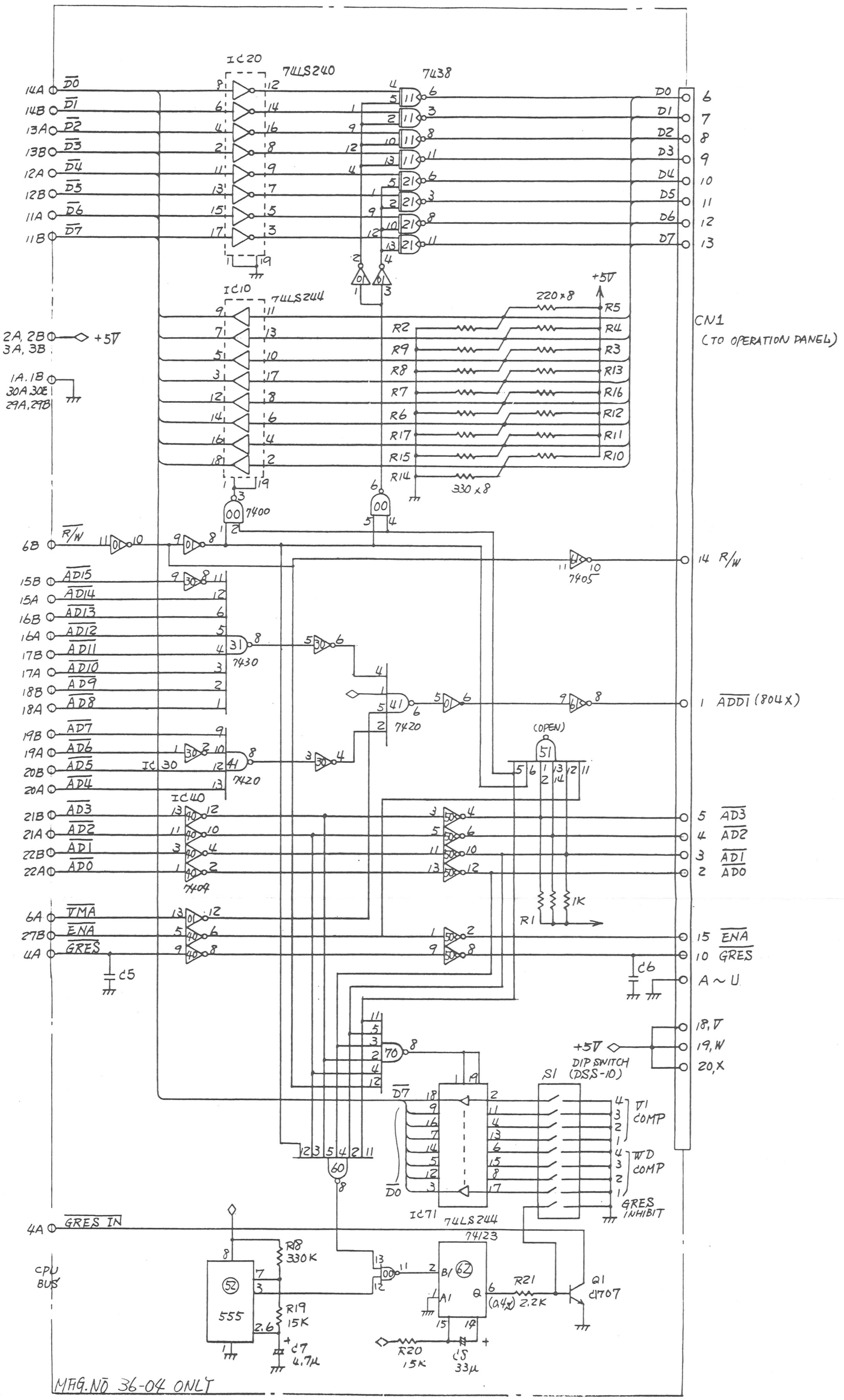
IC20
74LS240
7438
14A D0
14B D1
13A D2
13B D3
12A D4
12B D5
11A D6
11B D7
D0 6
D1 7
D2 8
D3 9
D4 10
D5 11
D6 12
D7 13
IC10
74LS244
+5V
220×8
R5
R4
R3
R13
R16
R12
R11
R10
R2
R9
R8
R7
R6
R17
R15
R14
330×8
CN1
(TO OPERATION PANEL)
2A, 2B
3A, 3B
+5V
1A. 1B
30A 30E
29A, 29B
7400
6B R/W
14 R/W
7405
15B AD15
15A AD14
16B AD13
16A AD12
17B AD11
17A AD10
18B AD9
18A AD8
19B AD7
19A AD6
20B AD5
20A AD4
7430
7420
(OPEN)
IC40
21B AD3
21A AD2
22B AD1
22A AD0
7404
5 AD3
4 AD2
3 AD1
2 AD0
1 ADD1 (804X)
6A TMA
27B ENA
4A GRES
C5
R1
1K
15 ENA
10 GRES
C6
A ~ U
18, V
19, W
20, X
+5V
DIP SWITCH
(DSS-10)
S1
V1 COMP
WD COMP
GRES INHIBIT
D7
D0
IC71
74LS244
4A GRES IN
74123
CPU BUS
R18 330K
R19 15K
555
C7 4.7μ
R20 1.5K
C8 33μ
R21 (0.4W) 2.2K
Q1 2707
MFG.NO 36-04 ONLY

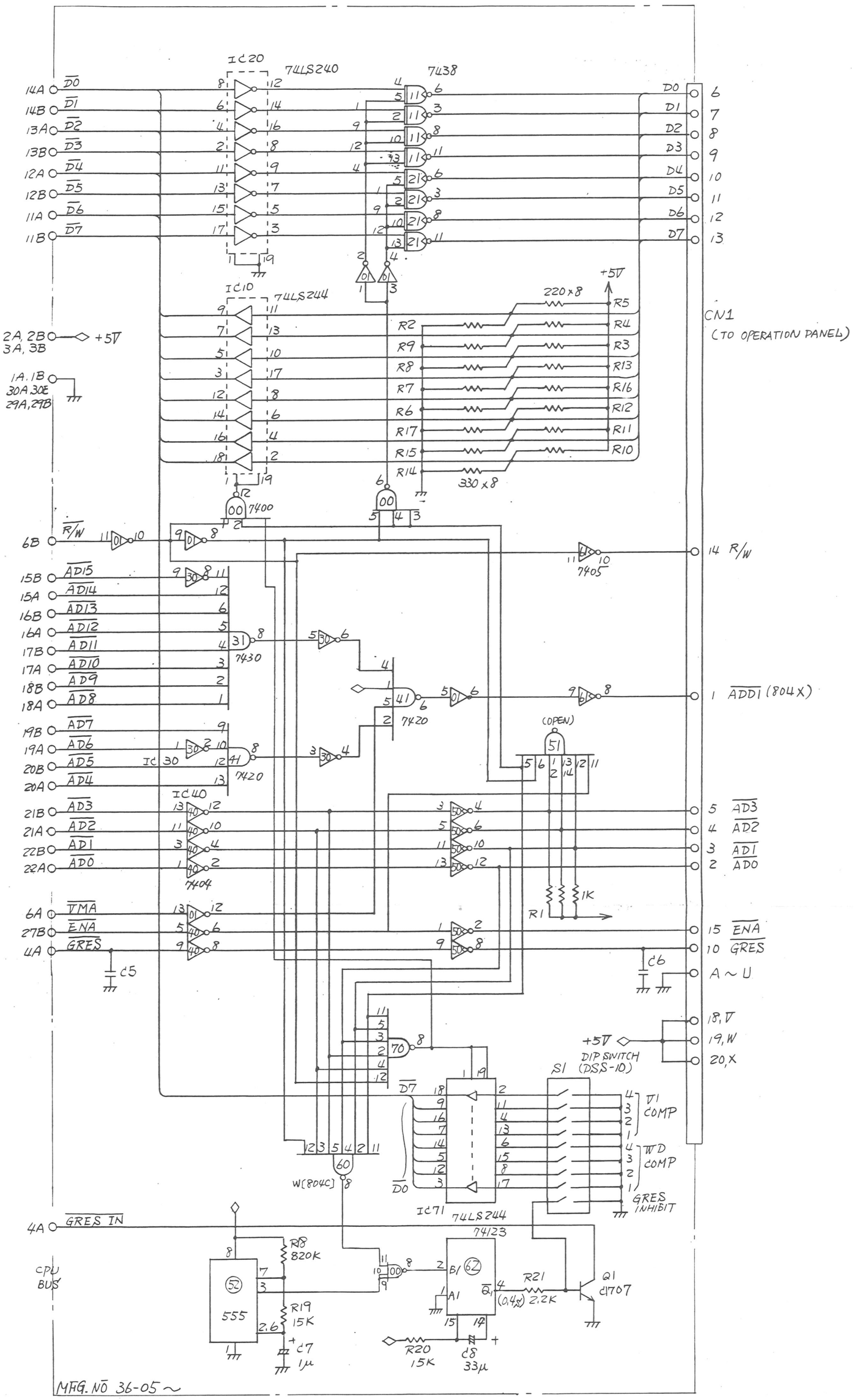
IC20
74LS240
7438
14A D0
14B D1
13A D2
13B D3
12A D4
12B D5
11A D6
11B D7
D0 6
D1 7
D2 8
D3 9
D4 10
D5 11
D6 12
D7 13
IC10
74LS244
+5V
220×8
R5
R2
R4
R9
R3
R8
R13
R7
R16
R6
R12
R17
R11
R15
R10
R14
330×8
CN1
(TO OPERATION PANEL)
2A, 2B
3A, 3B
+5V
1A, 1B
30A, 30B
29A, 29B
7400
6B R/W
14 R/W
7405
15B AD15
15A AD14
16B AD13
16A AD12
17B AD11
17A AD10
18B AD9
18A AD8
19B AD7
19A AD6
20B AD5
20A AD4
7430
7420
IC40
7404
21B AD3
21A AD2
22B AD1
22A AD0
5 AD3
4 AD2
3 AD1
2 AD0
1 ADD1 (804X)
(OPEN)
R1 1K
6A VMA
27B ENA
4A GRES
15 ENA
10 GRES
C5
C6
A ~ U
18, V
19, W
20, X
+5V
DIP SWITCH
(DSS-10)
S1
D7
D0
IC71 74LS244
V1 COMP
WD COMP
GRES INHIBIT
W(804C)
4A GRES IN
74123
CPU BUS
555
R8 820K
R19 15K
C7 1μ
R20 15K
C8 33μ
R21 (0.4W) 2.2K
Q1 d1707
MFG. NO 36-05~

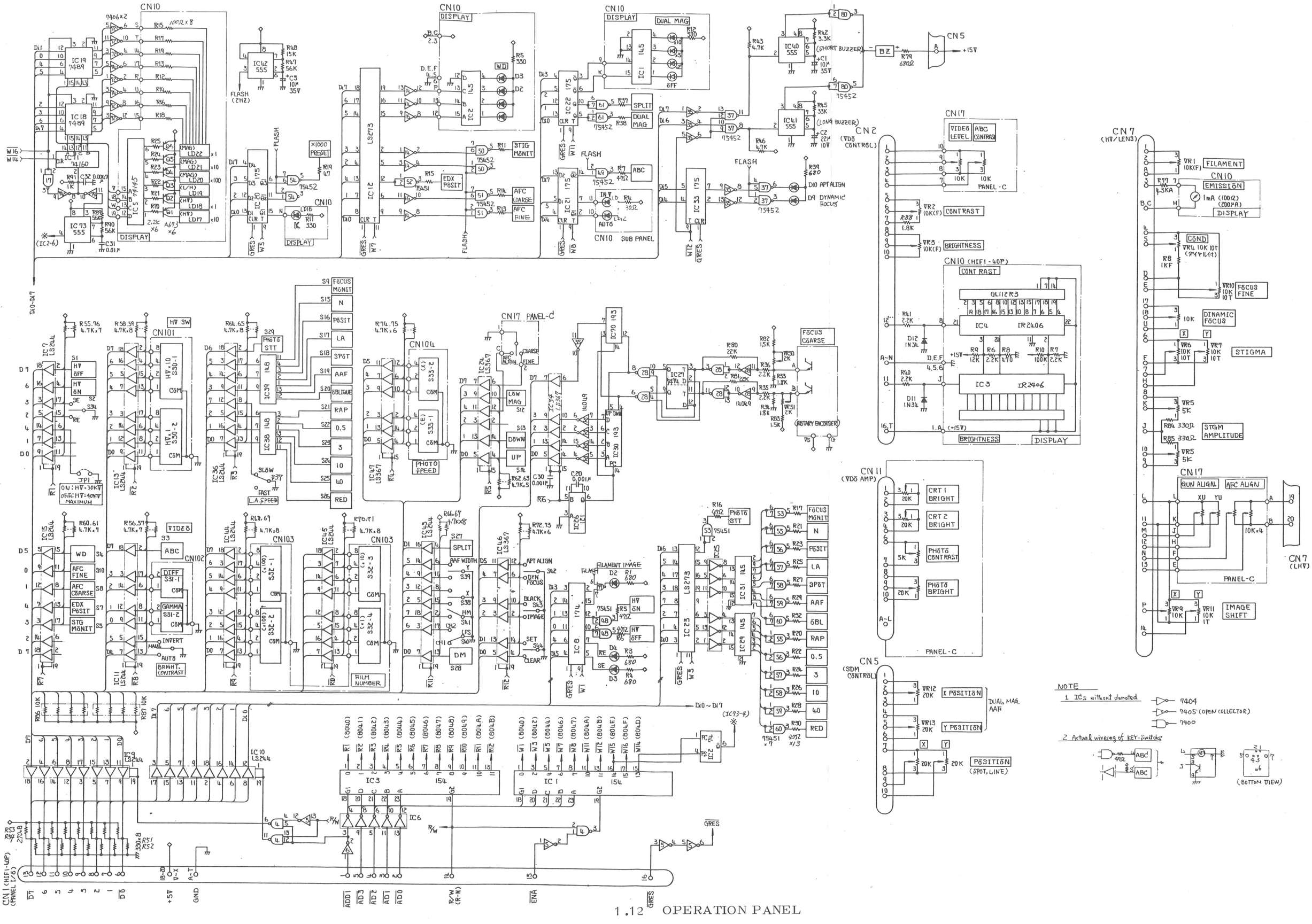
CN10
CN10 DISPLAY
CN10 DISPLAY DUAL MAG
CN5
CN2 (VDO CONTROL)
CN17
CN7 (HV/LENS)
CN11 (VDO AMP)
CN1 (HIFI-40P) (PANEL 1/6)
CN101
CN102
CN103
CN104
CN10 (HIFI-40P)
CN17 PANEL-C
DISPLAY
SUB PANEL
PANEL-C
FLASH (2HZ)
FLASH
×1000 PRESET
STIG MONIT
AFC COARSE
AFC FINE
EDX POSIT
ABC
DUAL MAG
SPLIT
APT ALIGN
DYN FOCUS
BLACK
IMAGE
SET
CLEAR
FILAMENT IMAGE
PHOTO STT
PHOTO SPEED
FAST
L.A.SPEED
FILM NUMBER
INVERT
AUTO
BRIGHT. CONTRAST
HV SW
HV ON
HV OFF
HV=30KV
HV=40KV
MAXIMUM
VIDEO
FOCUS MONIT
FOCUS COARSE
FOCUS FINE
DYNAMIC FOCUS
STIGMA
STGM AMPLITUDE
IMAGE SHIFT
FILAMENT
CONTRAST
BRIGHTNESS
EMISSION
GUN ALIGN.
AFC ALIGN
CRT 1 BRIGHT
CRT 2 BRIGHT
PHOTO CONTRAST
PHOTO BRIGHT
X POSITION
Y POSITION
DUAL MAG. AAF
(SPOT, LINE)
ROTARY ENCODER
(SHORT BUZZER)
(LONG BUZZER)
DIO APT ALIGN
DI DYNAMIC FOCUS
NOTE
1 ICs without denoted
7404
7405 (OPEN COLLECTOR)
7400
2 Actual wireing of KEY-Switches
(BOTTOM VIEW)
D0~D7
(IC73-4)
(IC2-6)
ADD1 ADD3 ADD2 ADD1 ADD0
R/W (R-W)
ENA
GRES
+5V
GND

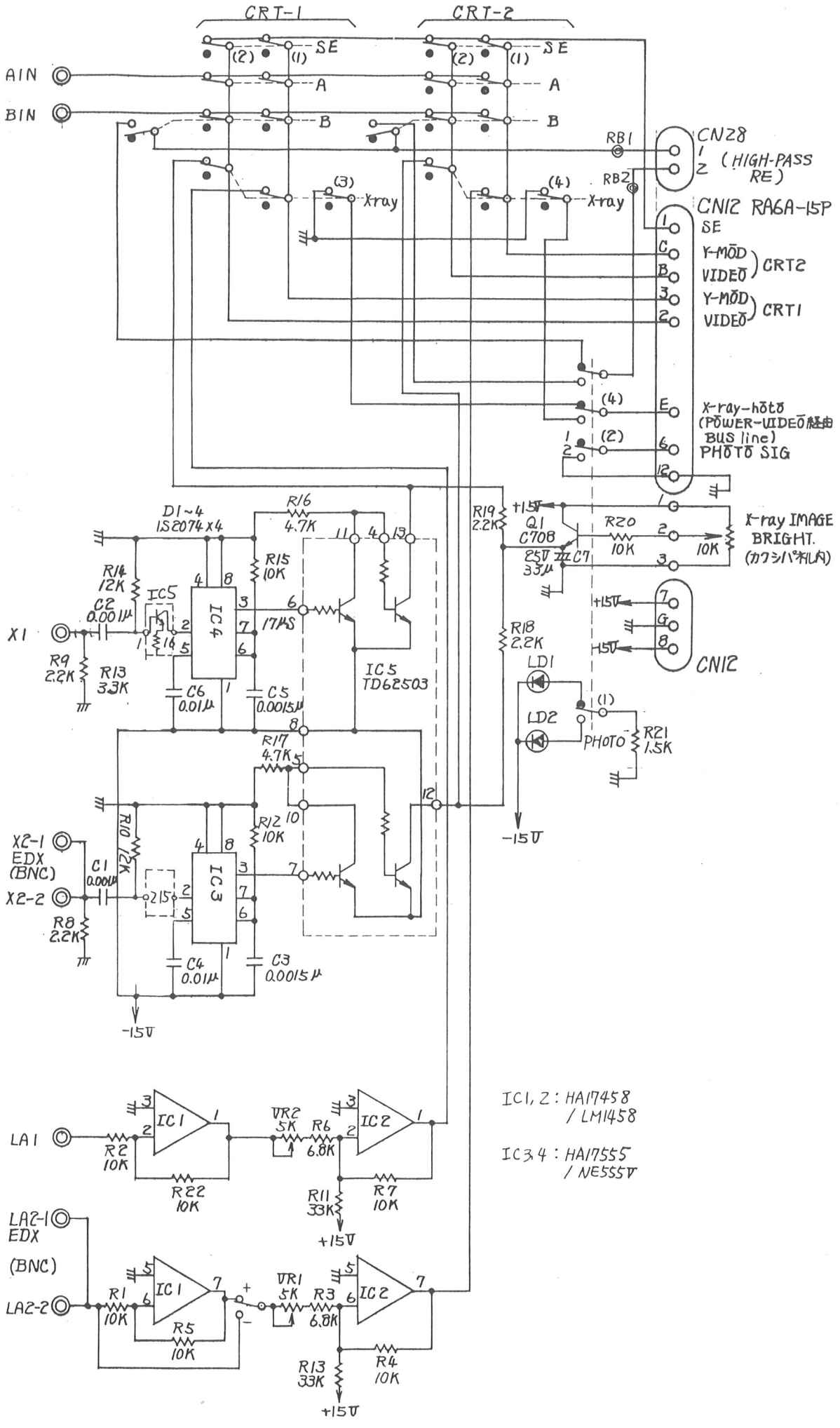

1.13 SIGNAL SELECTOR

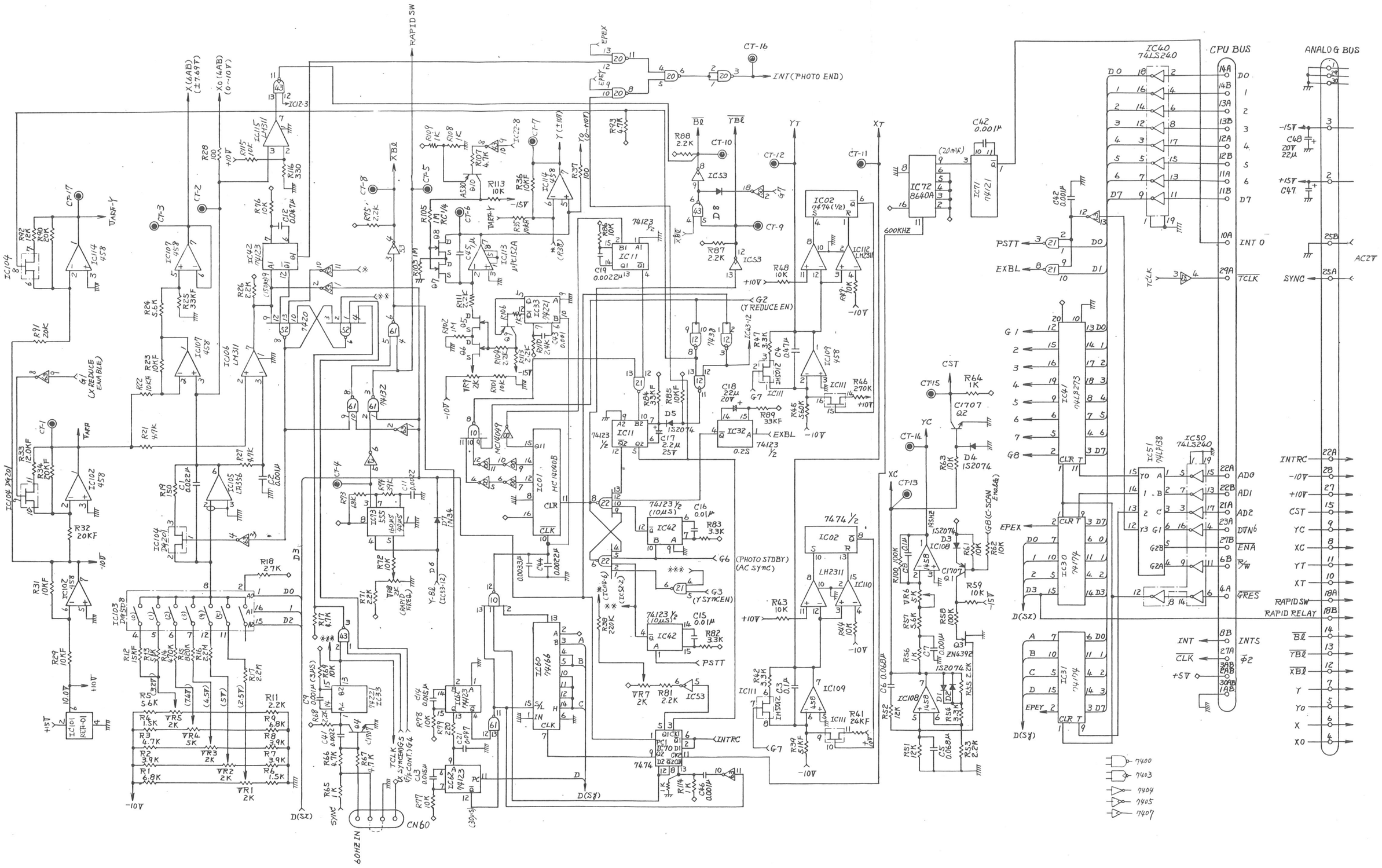

1.14 SWEEP GENERATOR

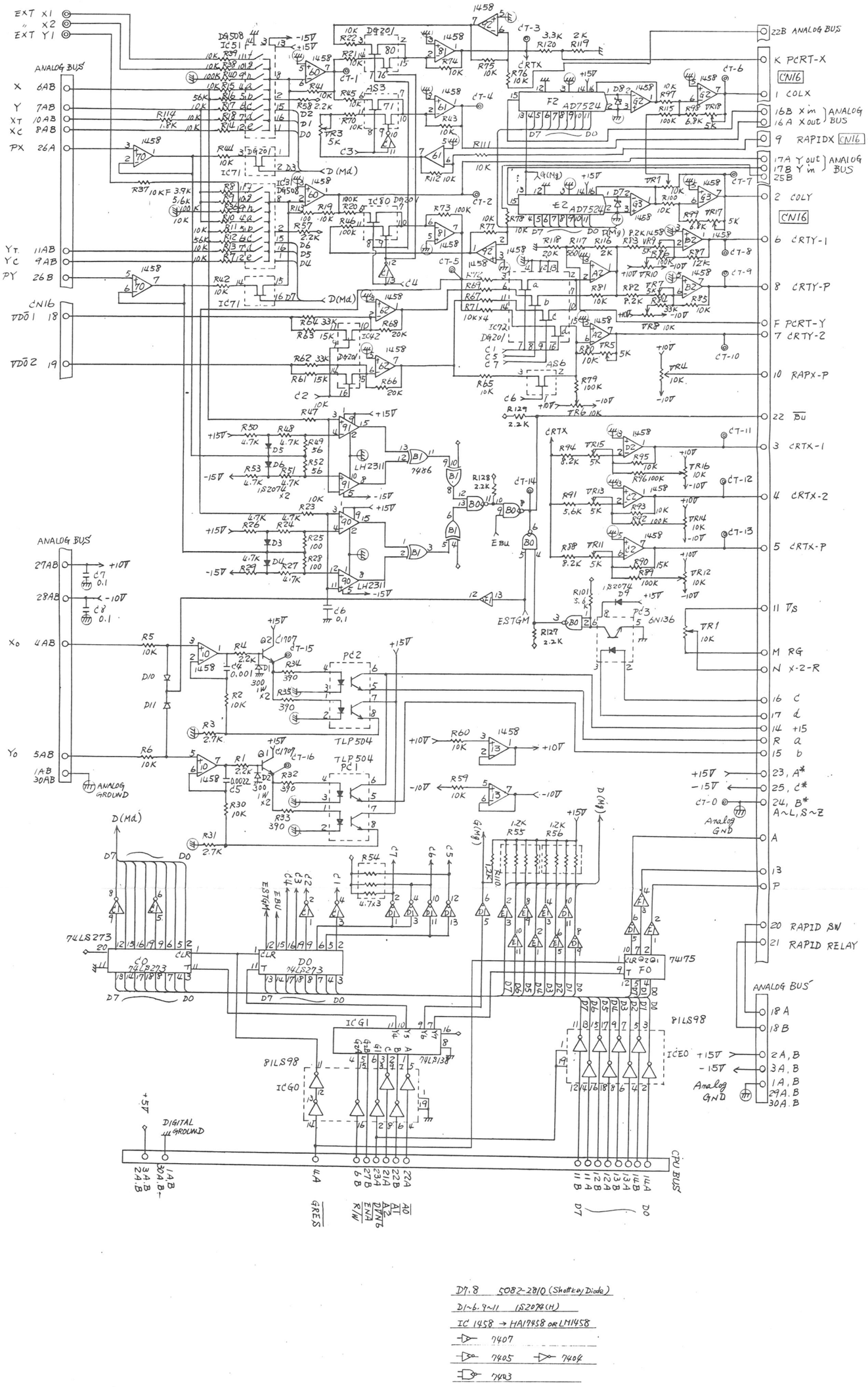
EXT X1
" X2
EXT Y1
ANALOG BUS
X 6AB
Y 7AB
XT 10AB
XC 8AB
PX 26A
YT 11AB
YC 9AB
PY 26B
CN16
VDD1 18
VDD2 19
IC51 DA508
IC71 DA508
IC72 DA508
IC80 DA201
DA201
DA420
AS3
AS6
AD7524
E2 AD7524
F2 AD7524
1458
LH2311
7486
1S2074 x2
TLP504
PC1
PC2
Q1 2SC1107
Q2 2SC1107
ESTGM
EBU
D(Md)
D(Mg)
74LS273
74175
74LS138
81LS98
ICE0
ICG0
ICG1
ANALOG GROUND
DIGITAL GROUND
+5V
+15V
-15V
+10V
-10V
22B ANALOG BUS
K PCRT-X
1 COLX
16B X in
16A X out
9 RAPIDX
17A Y out
17B Y in
25B
2 COLY
6 CRTY-1
8 CRTY-P
F PCRT-Y
7 CRTY-2
10 RAPX-P
22 BU
3 CRTX-1
4 CRTX-2
5 CRTX-P
11 VS
M RG
N X-2-R
16 C
17 d
14 +15
R a
15 b
23, A*
25, C*
24, B*
A~L, S~Z
A
13
P
20 RAPID SW
21 RAPID RELAY
18 A
18 B
2A, B
3A, B
1A, B
29A. B
30A. B
CPU BUS
D7 D0
D1~6. 9~11 1S2074(H)
IC 1458 → HA17458 or LM1458
7407
7405
7404
7403

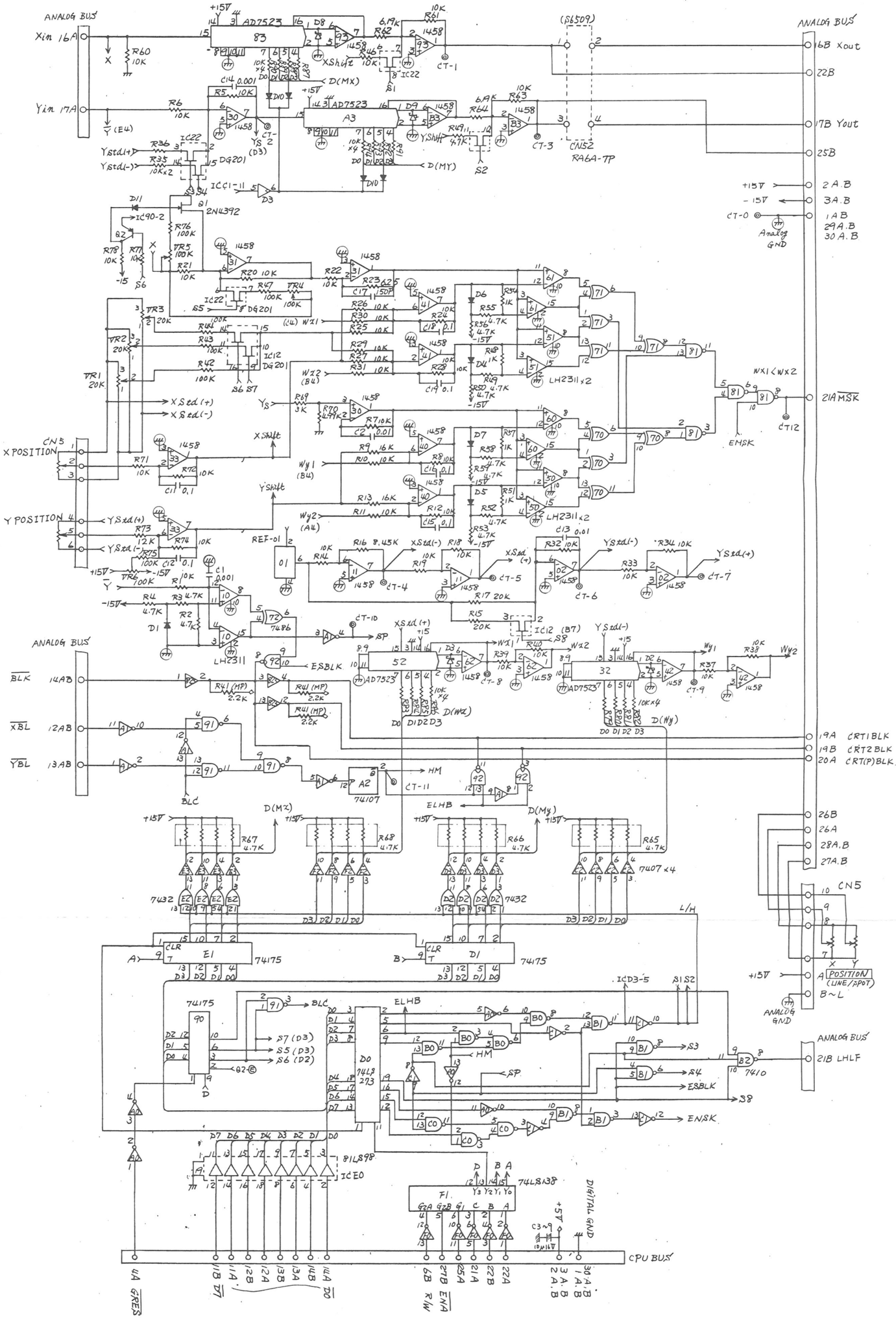

D2,3,8,9 5082-2810 (Shottkey Diode)

D10 μPA54H (Diode Array)

7404 7405

7409 7400

7403

1458 → HA17458 OR LM1458

Analog Ground Digital Ground

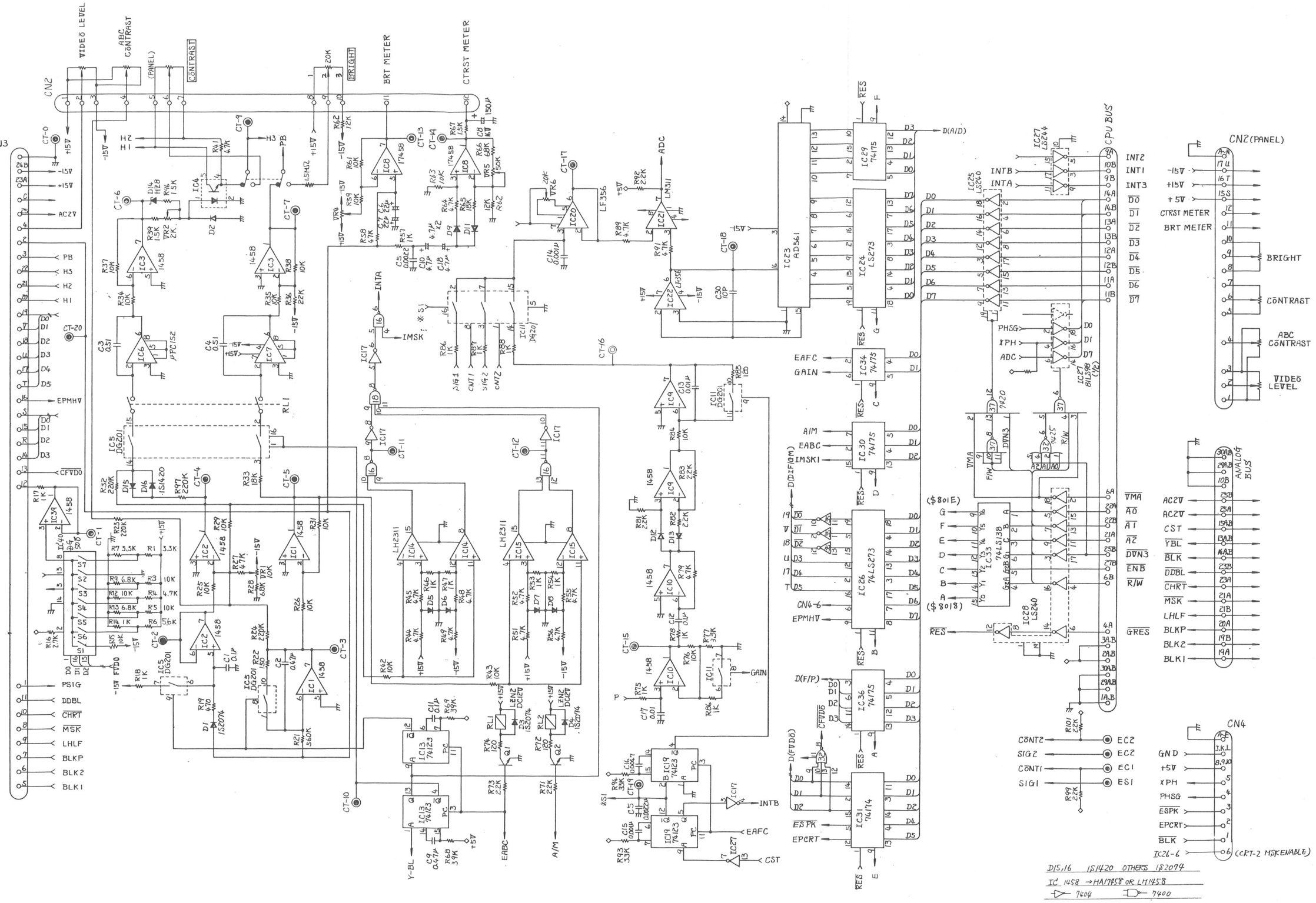

1.17 VIDEO CONTROL

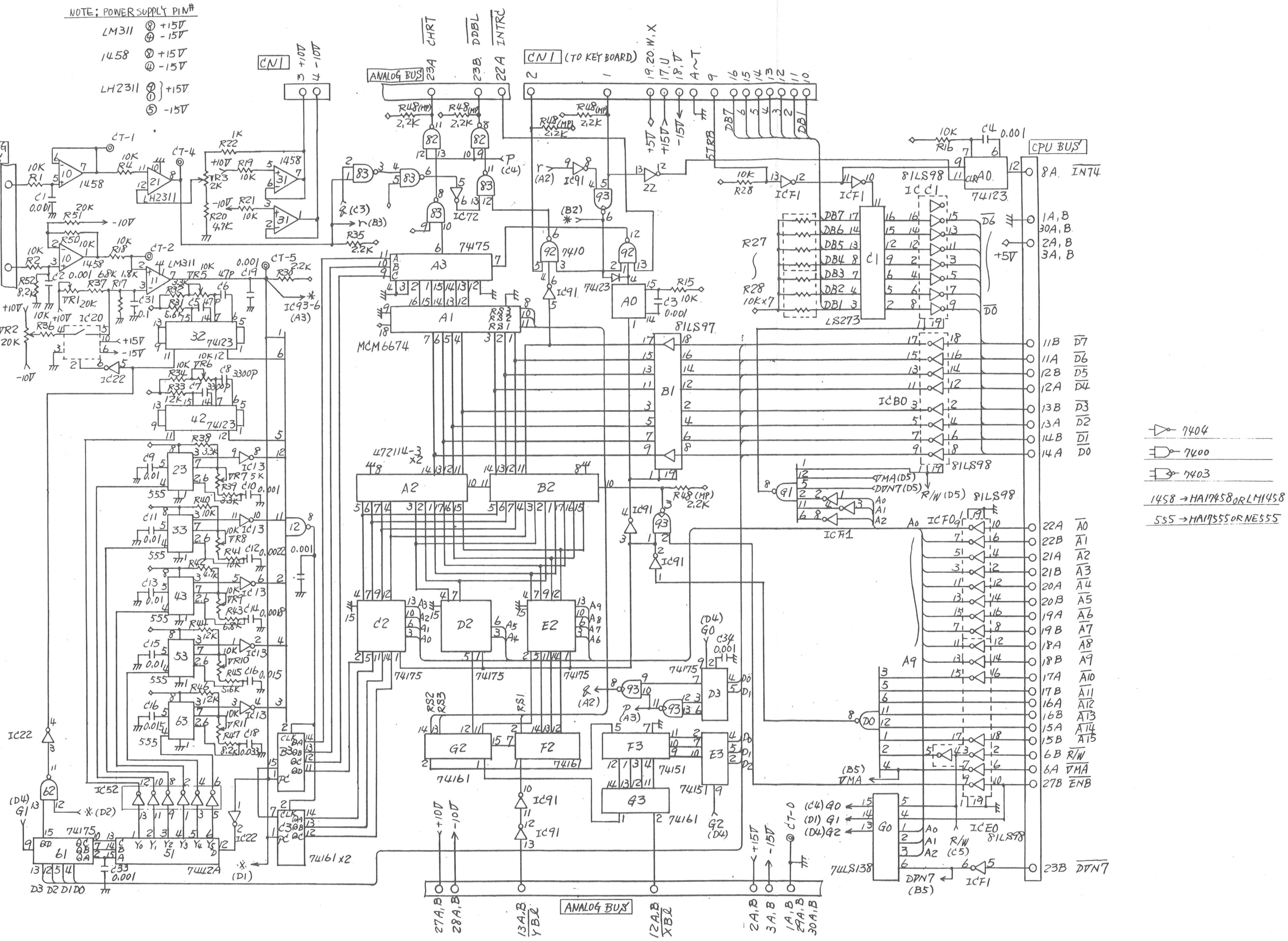
NOTE; POWER SUPPLY PIN#
LM311 ⑧ +15V ④ -15V
1458 ⑧ +15V ④ -15V
LH2311 ⑭ ① +15V ⑤ -15V
CN1
3 +10V
4 -10V
ANALOG BUS
CHRT
DBBL
INTRC
23A
23B
22A
CN1 (TO KEY BOARD)
2
1
19, 20, W, X
17, U
18, V
A~T
9
16
15
14
13
12
11
10
DB7
DB1
CPU BUS
8A
INT4
Y 7AB
X' 16A
CT-1
CT-2
CT-4
CT-5
1458
LH2311
LM311
R1
R2
R4
R18
R22
R19
R21
R20
R50
R51
R52
R37
R17
VR1 20K
VR2 20K
VR3 2K
R36
IC20
IC22
R35 2.2K
IC72
IC91
IC93-6 (A3)
7475
A3
A1
A2
B2
C2
D2
E2
MCM6674
R48(MP) 2.2K
74123
A0
R15
C3 0.001
R16
C4 0.001
R28
IC F1
81LS98
IC C1
LS273
R27
R28 10K×7
DB7
DB6
DB5
DB4
DB3
DB2
DB1
D6
D0
+5V
1A, B
30A, B
2A, B
3A, B
B1
81LS97
11B D7
11A D6
12B D5
12A D4
13B D3
13A D2
14B D1
14A D0
ICB0
472114-3 x2
74175
D3
E3
F3
G3
G2
F2
74161
74151
RS2 RS3 RS1
(D4) G0
(D1) G1
(D4) G2
(A2)
(A3)
(B2)
(C3)
(C4)
(B5) VMA
VMA (D5)
DVN7 (D5)
R/W (D5)
G1
A0
A1
A2
ICF1
ICE0
G0
74LS138
DVN7 (B5)
22A A0
22B A1
21A A2
21B A3
20A A4
20B A5
19A A6
19B A7
18A A8
18B A9
17A A10
17B A11
16A A12
16B A13
15A A14
15B A15
6B R/W
6A VMA
27B ENB
23B DVN7
A9
DO
C34 0.001
IC22
IC52
IC13
IC91
IC93-6
74LS74A
74161×2
C33 0.001
D3 D2 D1 D0
27A, B
28A, B
13A, B YB2
ANALOG BUS
12A, B XB2
2A, B
3A, B
1A, B 29A, B 30A, B
7404
7400
7403
1458 → HA17458 OR LM1458
555 → HA17555 OR NE555

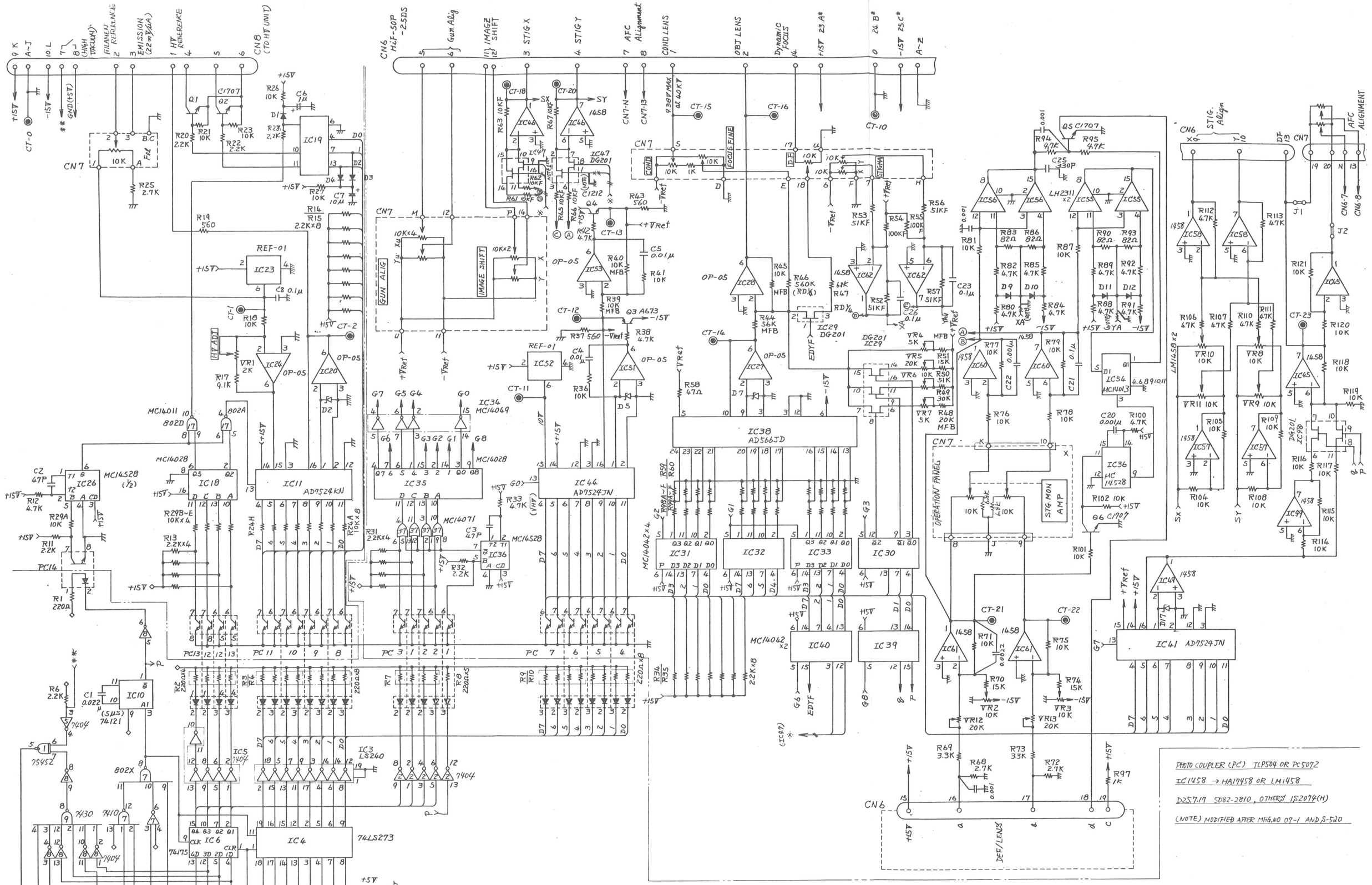

1.19 LENS/HV CONTROL

1.20 DEF/LENS POWER SUPPLY (1)

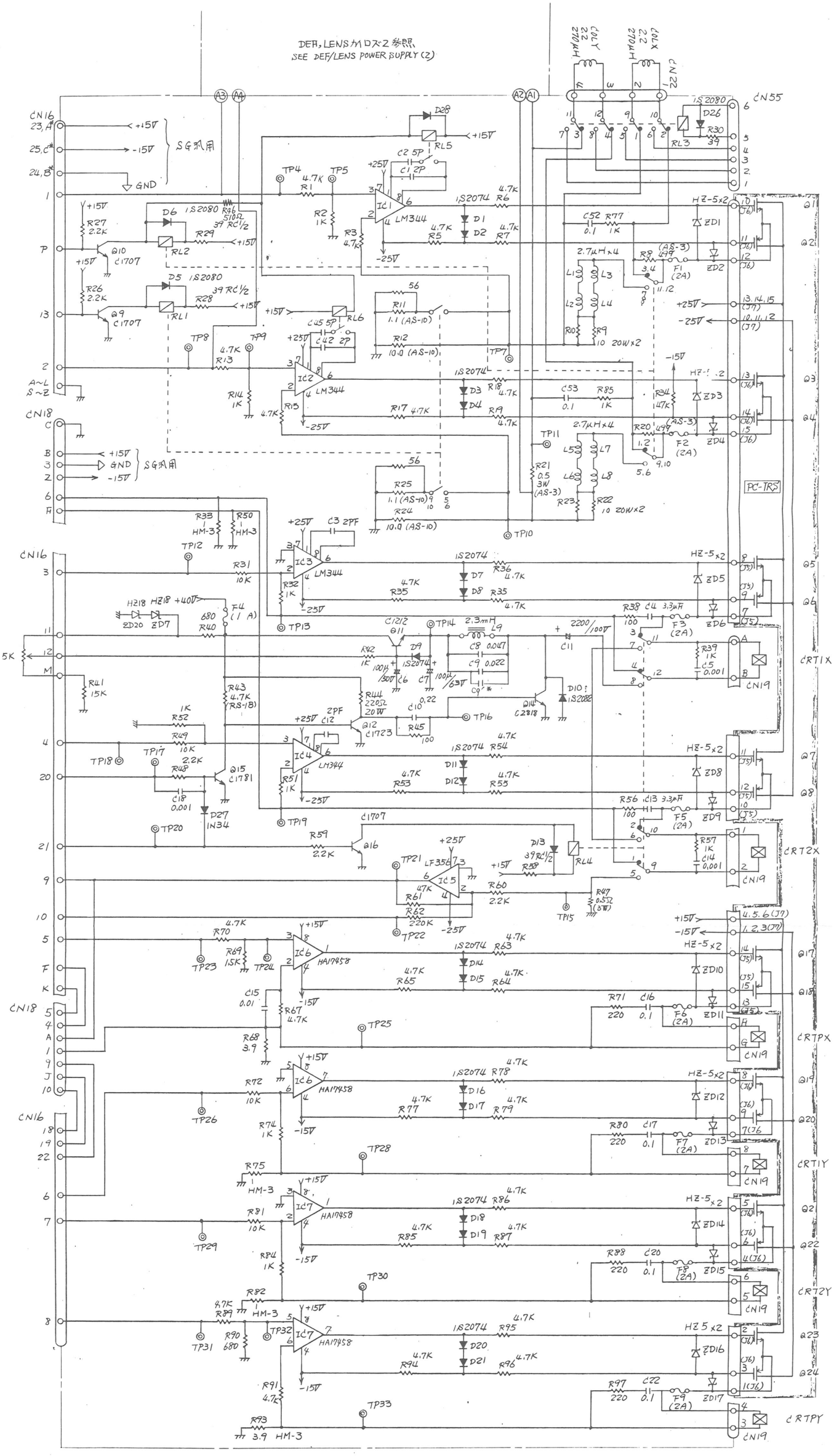

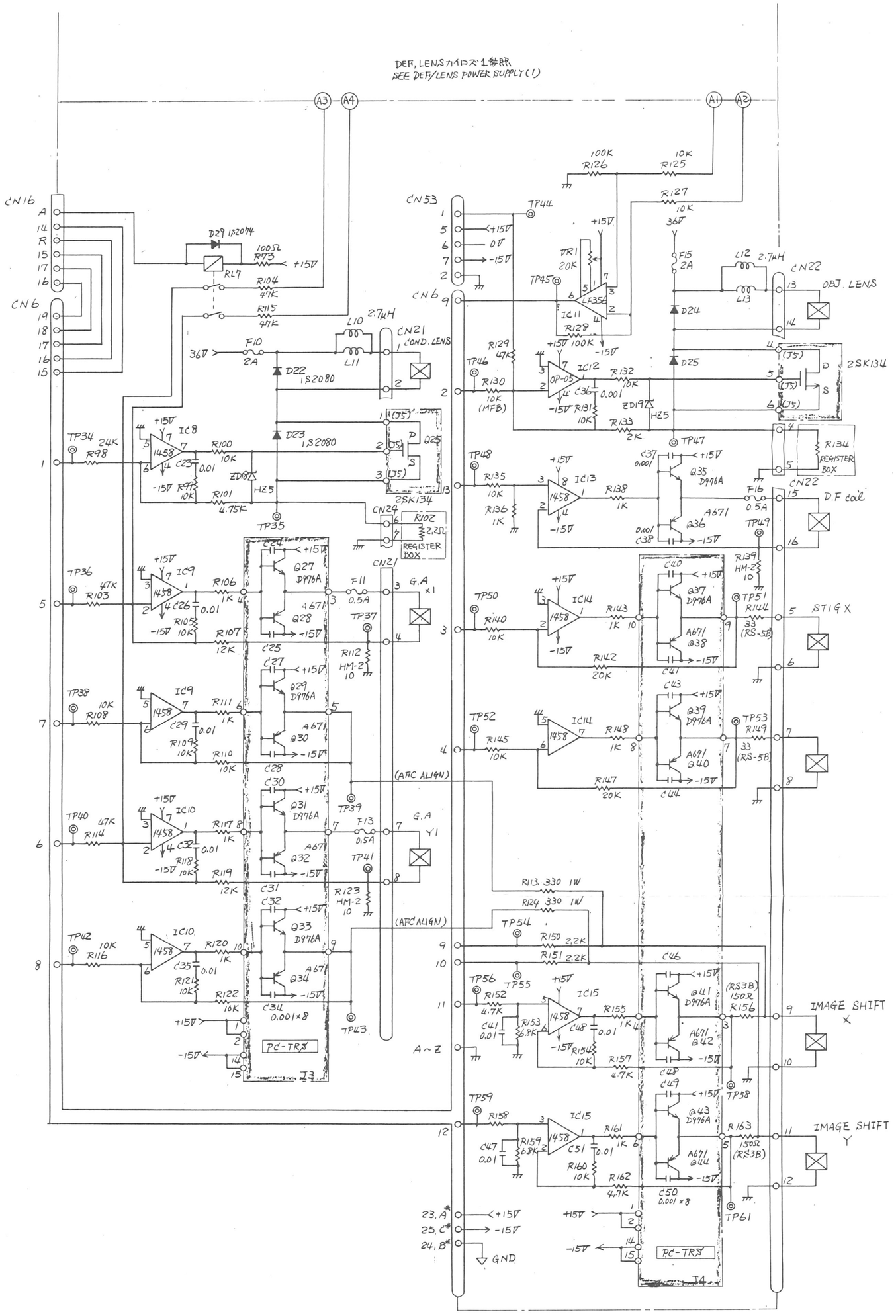
DEF, LENS ﾌﾟﾘﾝﾄｻｰｷｯﾄ 参照
SEE DEF/LENS POWER SUPPLY (1)
A3
A4
A1
A2
CN16
CN6
CN53
CN6
CN21
COND. LENS
CN22
OBJ. LENS
CN22
D.F coil
CN24
REGISTER BOX
REGISTER BOX
CN21
G.A x1
G.A Y1
STIG X
IMAGE SHIFT X
IMAGE SHIFT Y
(AFC ALIGN)
(AFC ALIGN)
A~Z
PC-TR8
PC-TR8
J7
J4
2SK134
2SK134
IC8
IC9
IC9
IC10
IC10.
IC11
IC12
IC13
IC14
IC15
IC15
1458
OP-05
LF356
D29 1S2094
D22 1S2080
D23 1S2080
D24
D25
ED18
ED19
HZ5
Q27 D976A
Q28 A671
Q29 D976A
Q30 A671
Q31 D976A
Q32 A671
Q33 D976A
Q34 A671
Q35 D976A
Q36 A671
Q37 D976A
Q38 A671
Q39 D976A
Q40 A671
Q41 D976A
Q42 A671
Q43 D976A
Q44 A671
TP34
TP35
TP36
TP37
TP38
TP39
TP40
TP41
TP42
TP43
TP44
TP45
TP46
TP47
TP48
TP49
TP50
TP51
TP52
TP53
TP54
TP55
TP56
TP58
TP59
TP61
R98 24K
R103 47K
R108 10K
R114 47K
R116 10K
R73 100Ω
R104 47K
R115 47K
R126 100K
R125 10K
R127 10K
R128 100K
R129 47
R130 10K (MFB)
R131 10K
R132 10K
R133 2K
R134 REGISTER BOX
R135 10K
R136 1K
R138 1K
R139 HM-2 10
R140 10K
R142 20K
R143 1K 10
R144 33 (RS-5B)
R145 10K
R147 20K
R148 1K 8
R149 33 (RS-5B)
R150 2.2K
R151 2.2K
R152 4.7K
R153 6.8K
R154 10K
R155 1K
R156 150Ω (RS3B)
R157 4.7K
R158
R159 6.8K
R160 10K
R161 1K 6
R162 4.7K
R163 150Ω (RS3B)
R100 10K
R101 4.75K
R102 2.2Ω
R105 10K
R106 1K
R107 12K
R109 10K
R110 10K
R111 1K
R112 HM-2 10
R117 8 1K
R118 10K
R119 12K
R120 10 1K
R121 10K
R122 10K
R123 HM-2 10
R113. 330 1W
R124 330 1W
TR1 20K
C23 0.01
C25
C26 0.01
C27
C28
C29 0.01
C30
C31
C32 0.01
C34 0.001×8
C35 0.01
C36 0.001
C37 0.001
C38 0.001
C40
C41 0.01
C43
C46
C47 0.01
C48 0.01
C49
C50 0.001×8
C51 0.01
F10 2A
F11 0.5A
F13 0.5A
F15 2A
F16 0.5A
L10 2.7μH
L11
L12 2.7μH
L13
36V
+15V
0V
-15V
-15V
A
14
R
15
17
16
19
18
17
16
15
1
5
6
7
2
9
1
2
3
4
5
6
7
8
9
10
11
12
13
14
15
23, A*
25, C*
24, B*
GND
* IC8.9.10.13.14.15 : HA17458, OR LM1458

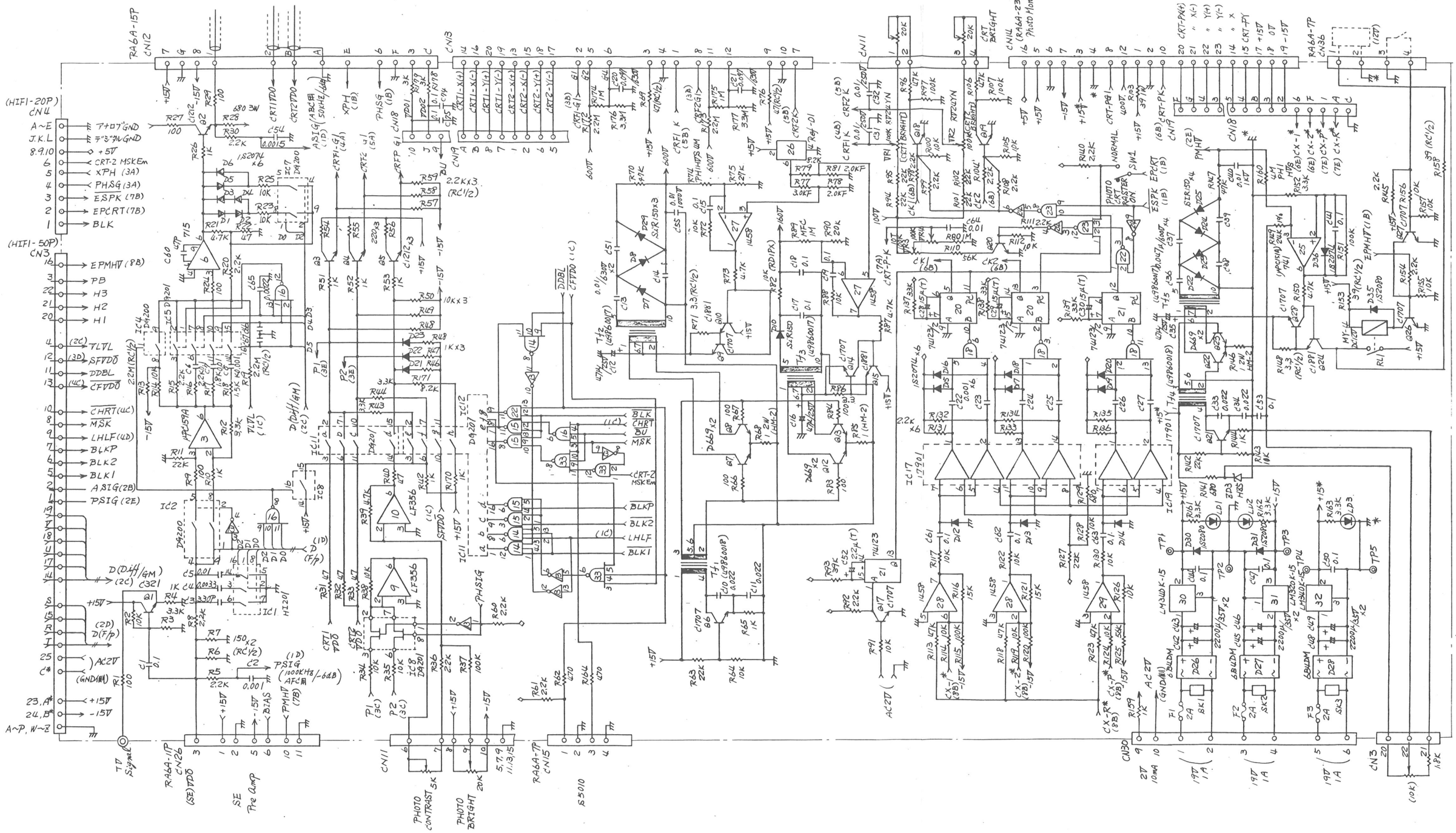

1.22 VIDEO AMP

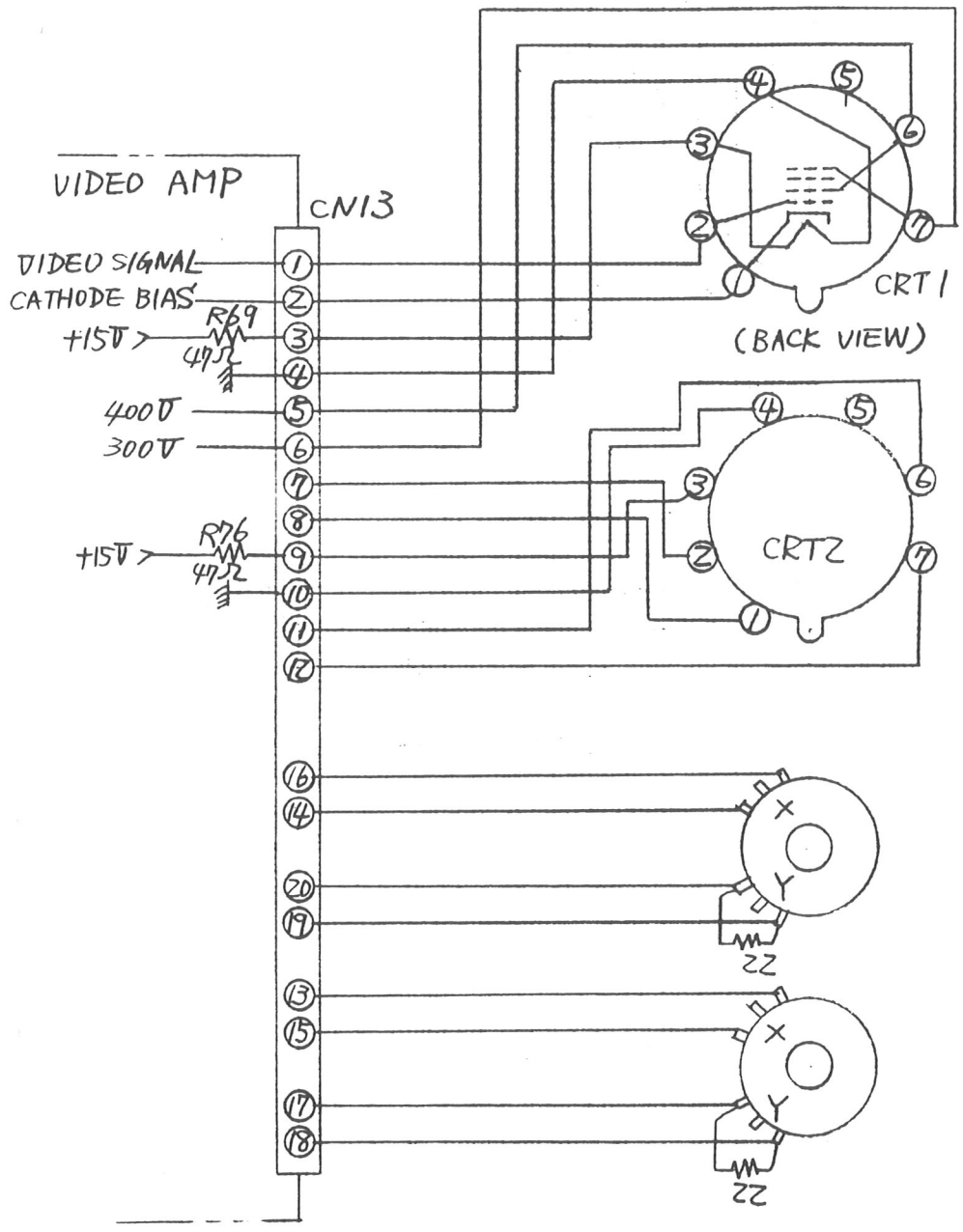

1.23 VIEW CRT UNIT

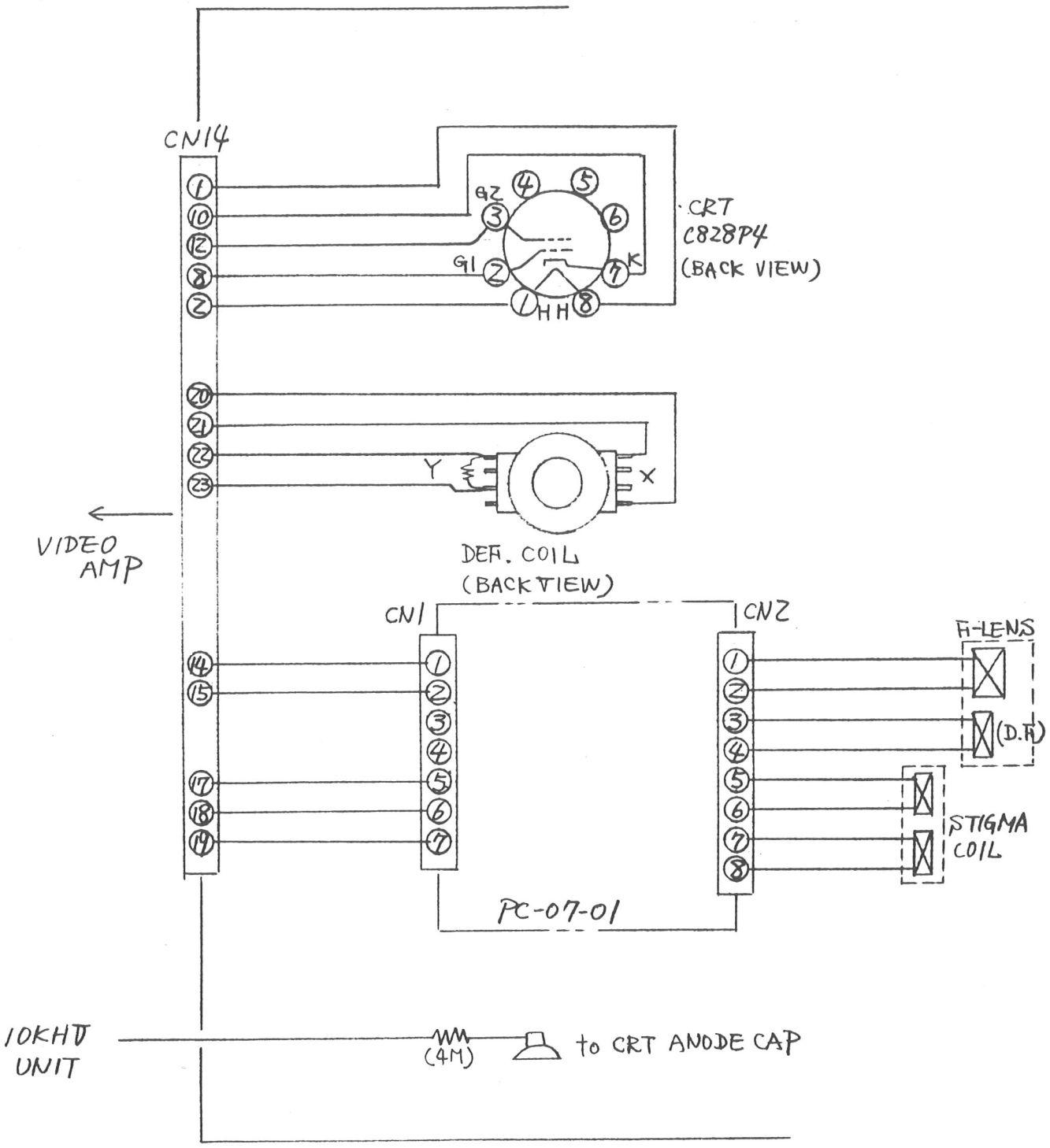

1.24 PHOTO CRT UNIT

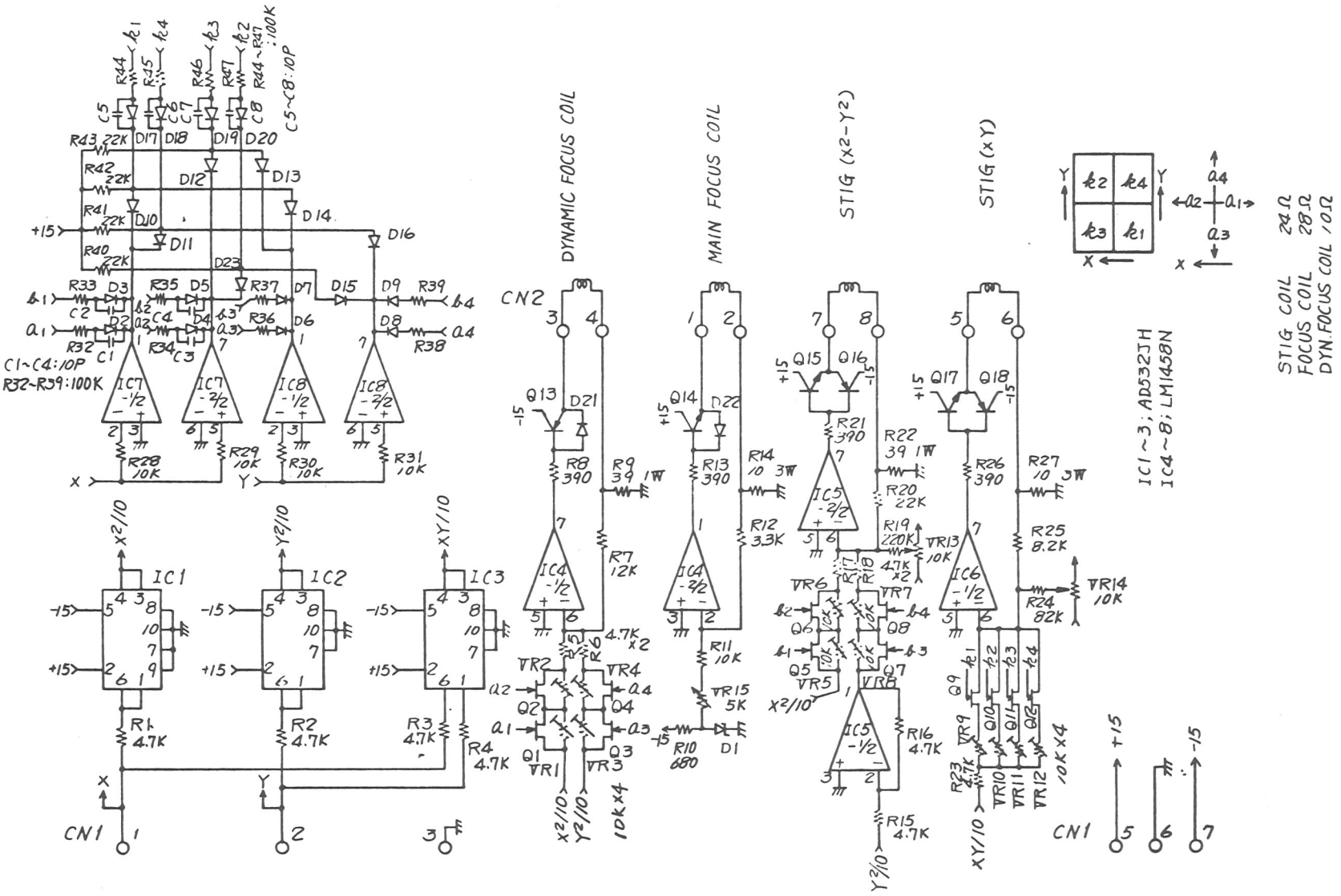
DYNAMIC FOCUS COIL
MAIN FOCUS COIL
STIG (X2-Y2)
STIG (XY)
IC1~3; AD532TH
IC4~8; LM1458N
STIG COIL 24Ω
FOCUS COIL 28Ω
DYN.FOCUS COIL 10Ω
C1~C4:10P
R32~R39:100K
C5~C8:10P
R44~R47:100K
CN1
CN2

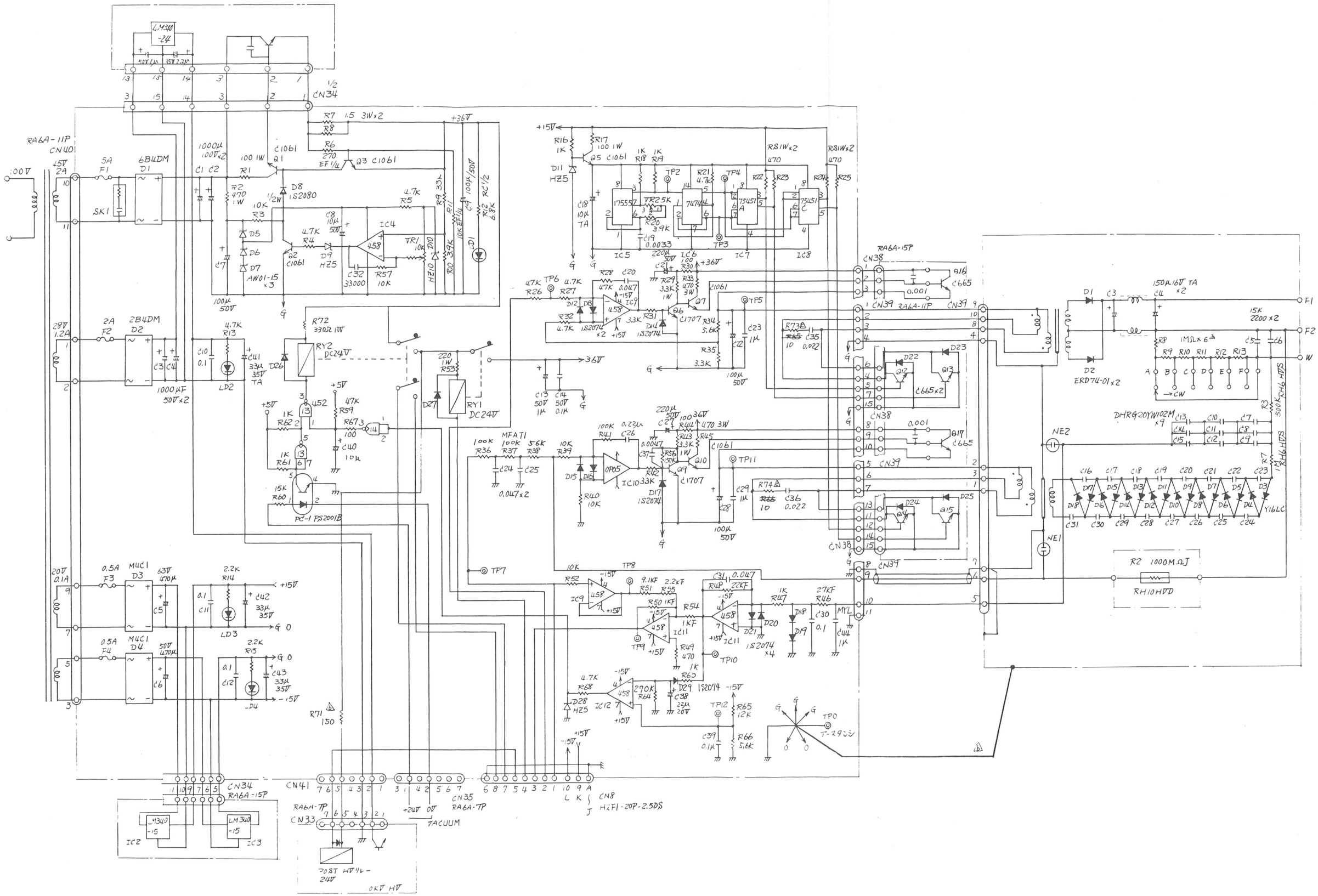

1.26 40KV HV POWER SUPPLY

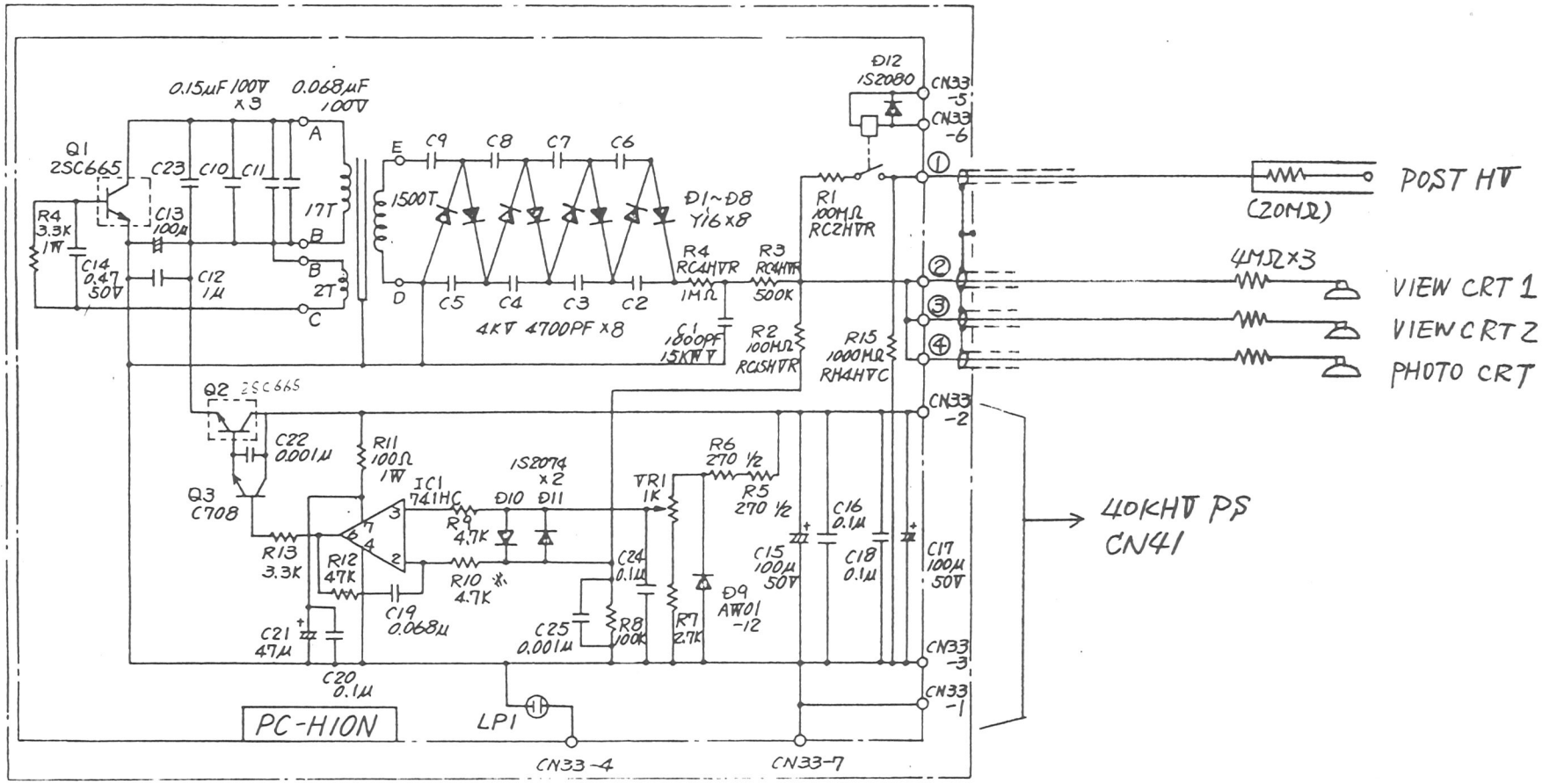

1.27 10KV HV POWER SUPPLY

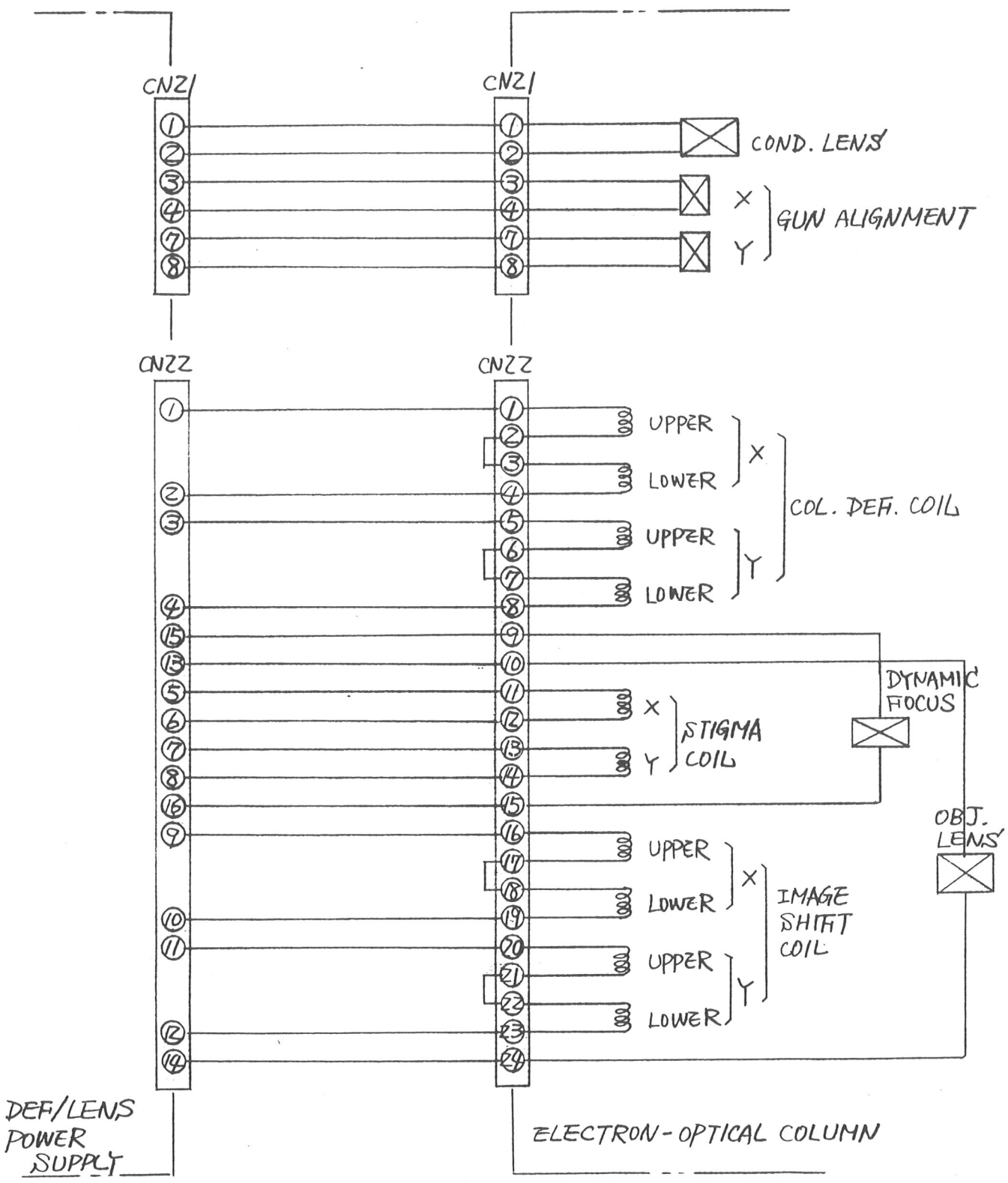

2.1. DISPLAY-COLUMN WIRING DIAGRAM

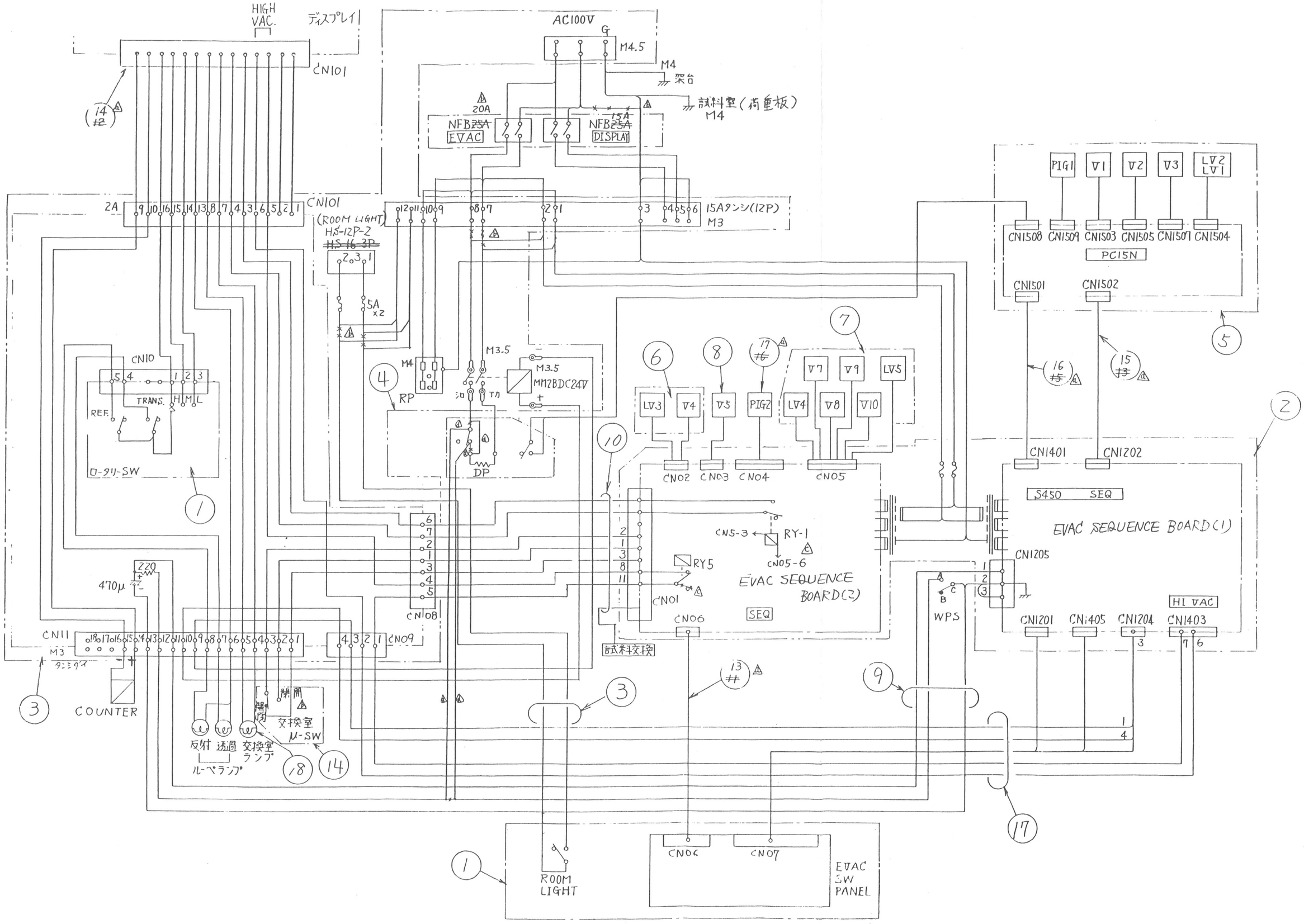

2.2 EVAC SEQUENCE WIRING DIAGRAM

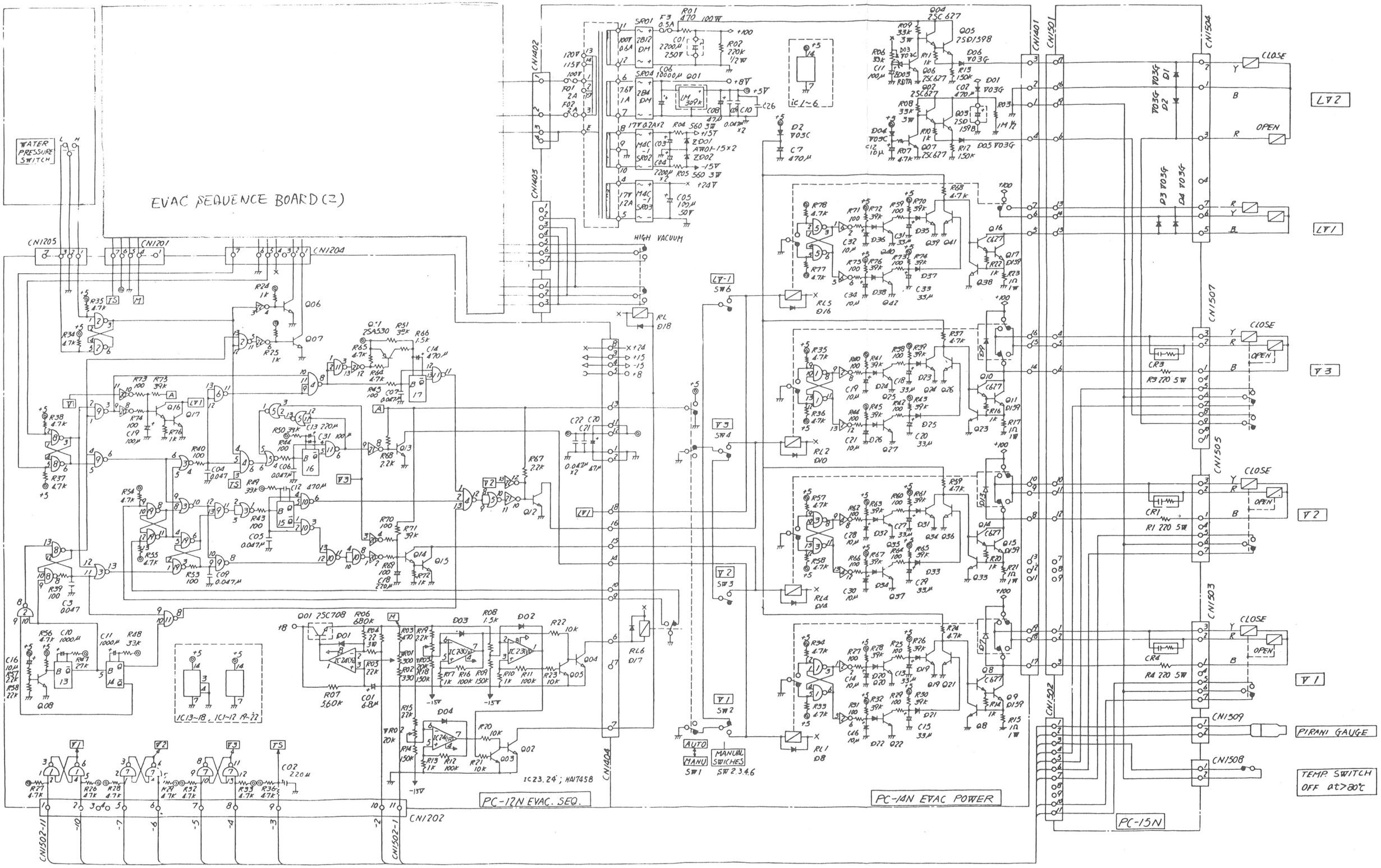

2.3 EVAC SEQUENCE (1)

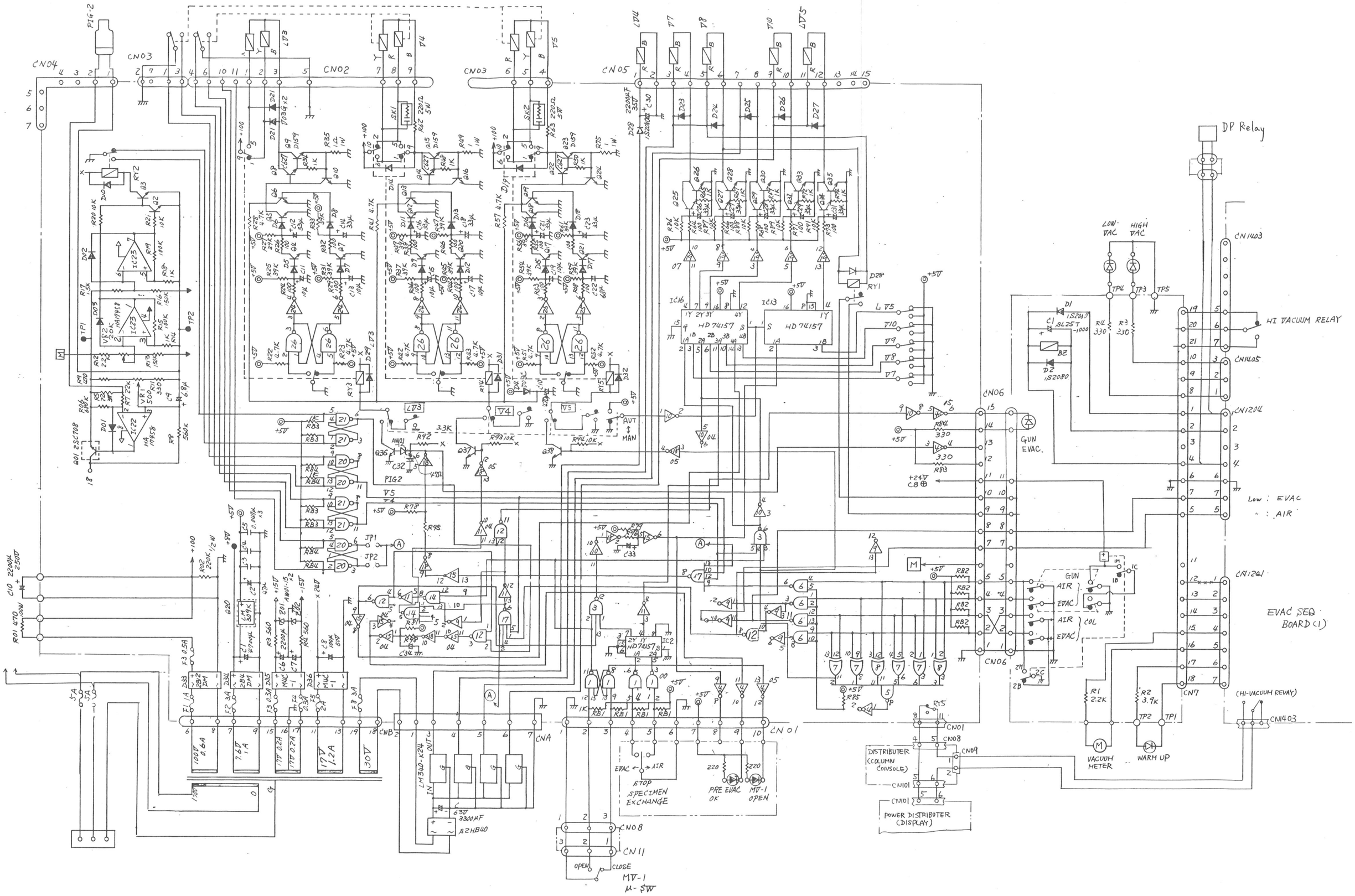

2.4 EVAC SEQUENCE (2)

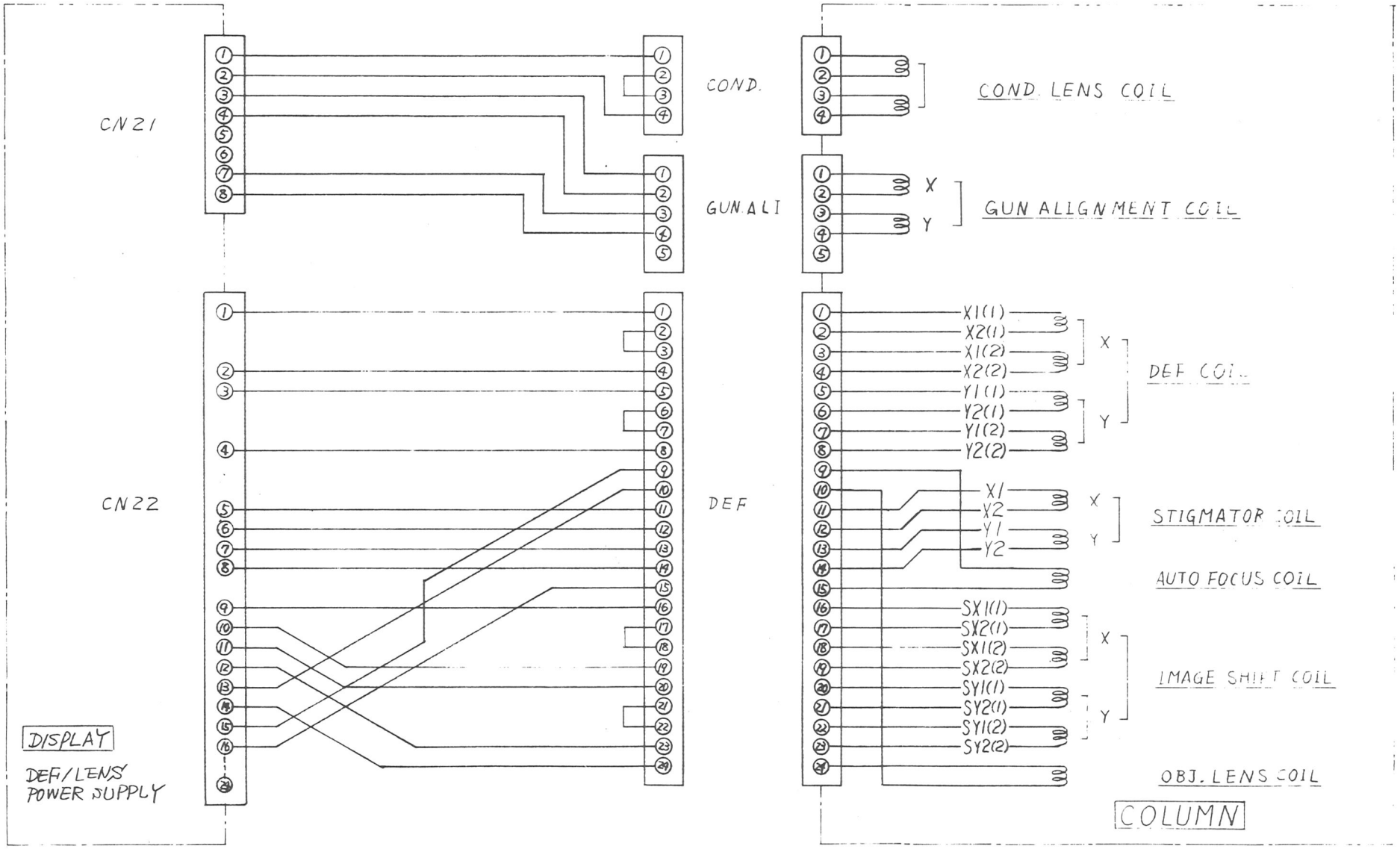

3.1 DISPLAY-COLUMN WIRING DIAGRAM (1)

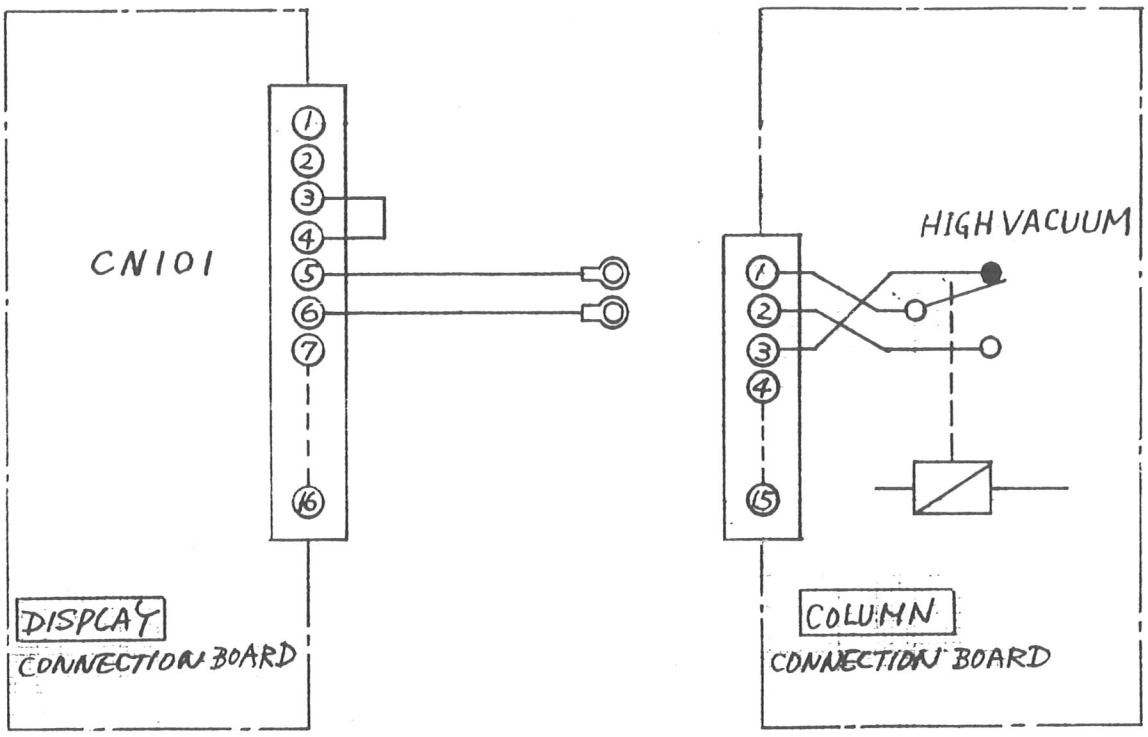

3.2 DISPLAY-COLUMN WIRING DIAGRAM (2)

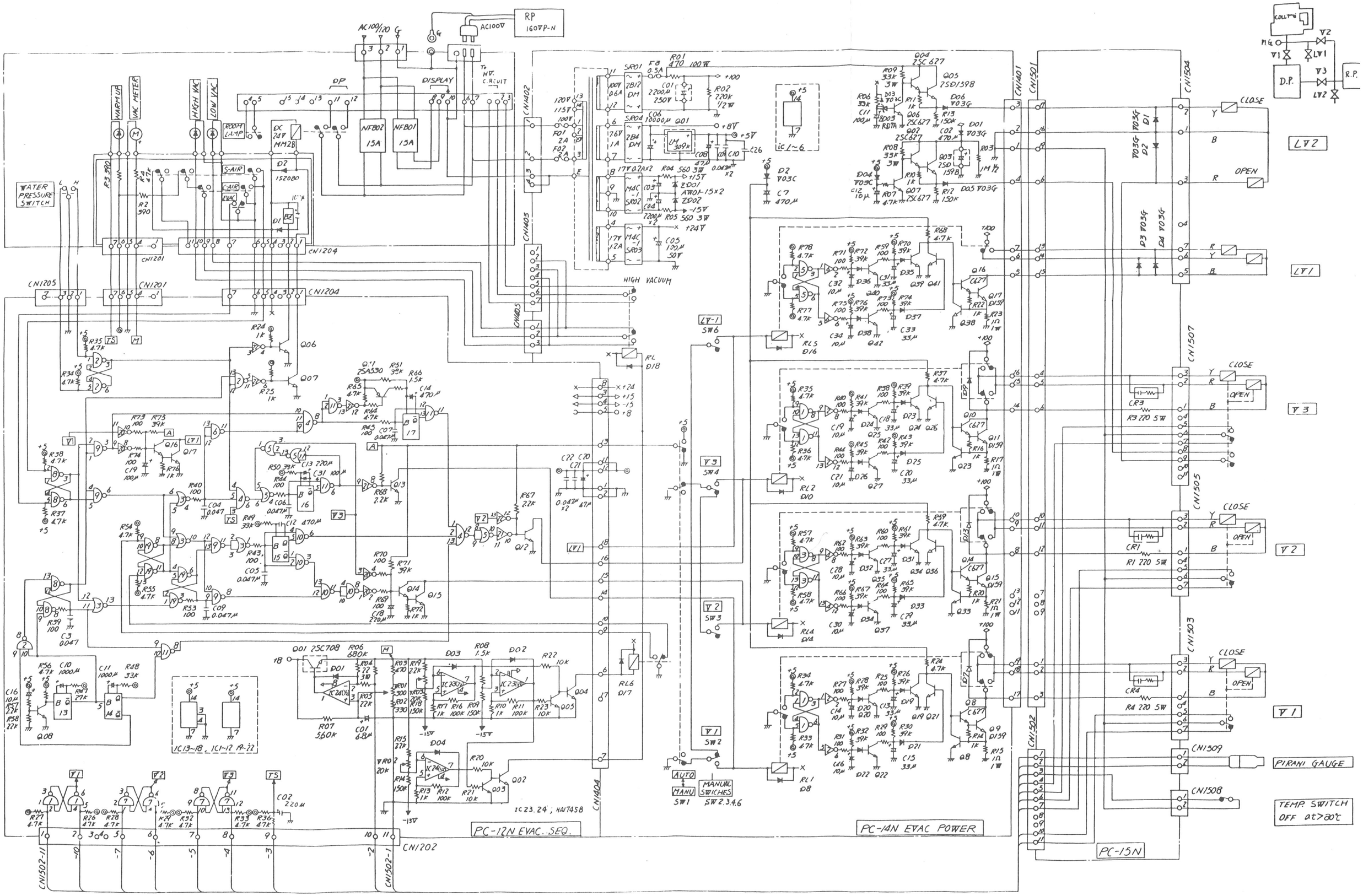

3.3 EVACUATING SEQUENCE

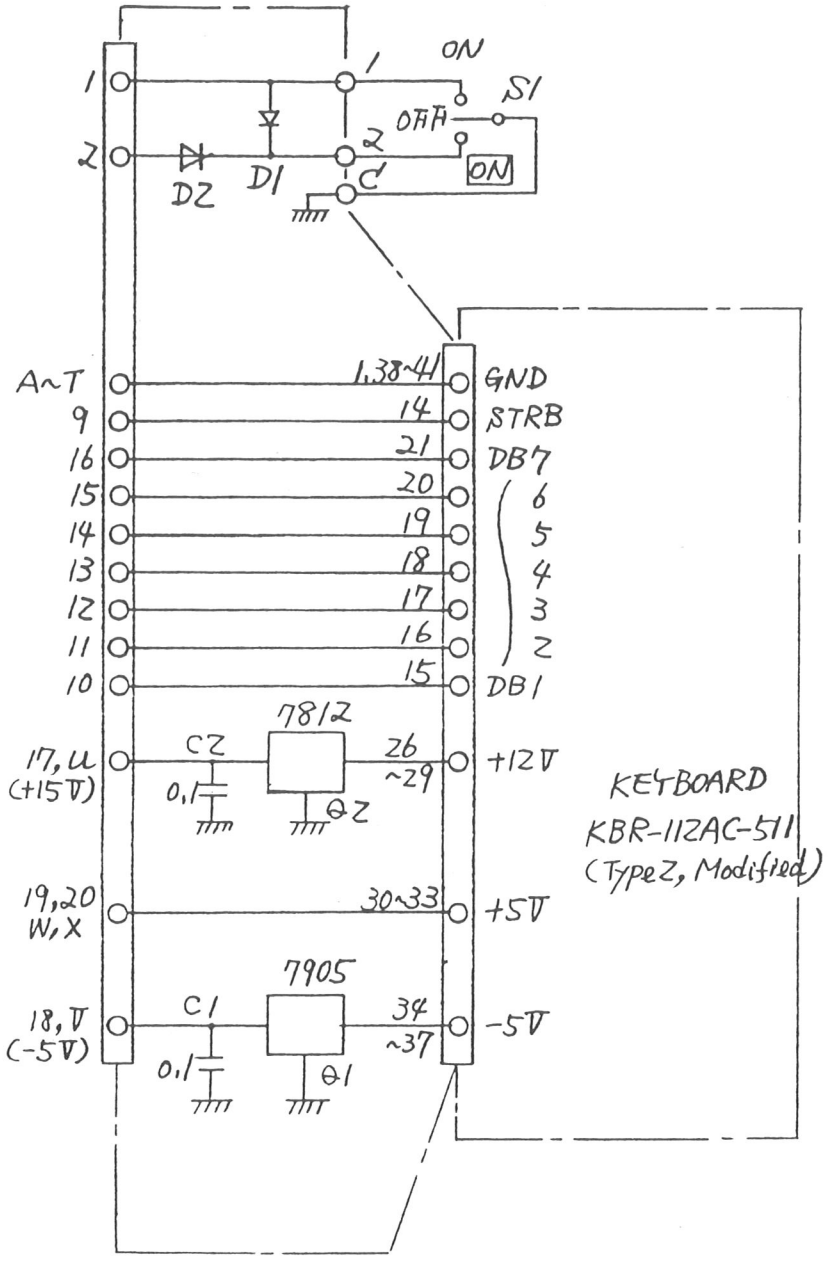
ON
S1
OFF
ON
1
2
C
D1
D2
A~T
9
16
15
14
13
12
11
10
17, U
(+15V)
19,20
W, X
18, V
(-5V)
1,38~44
14
21
20
19
18
17
16
15
GND
STRB
DB7
6
5
4
3
2
DB1
7812
C2
0.1
Q2
26
~29
+12V
30~33
+5V
7905
C1
0.1
Q1
34
~37
-5V
KEYBOARD
KBR-112AC-511
(Type Z, Modified)

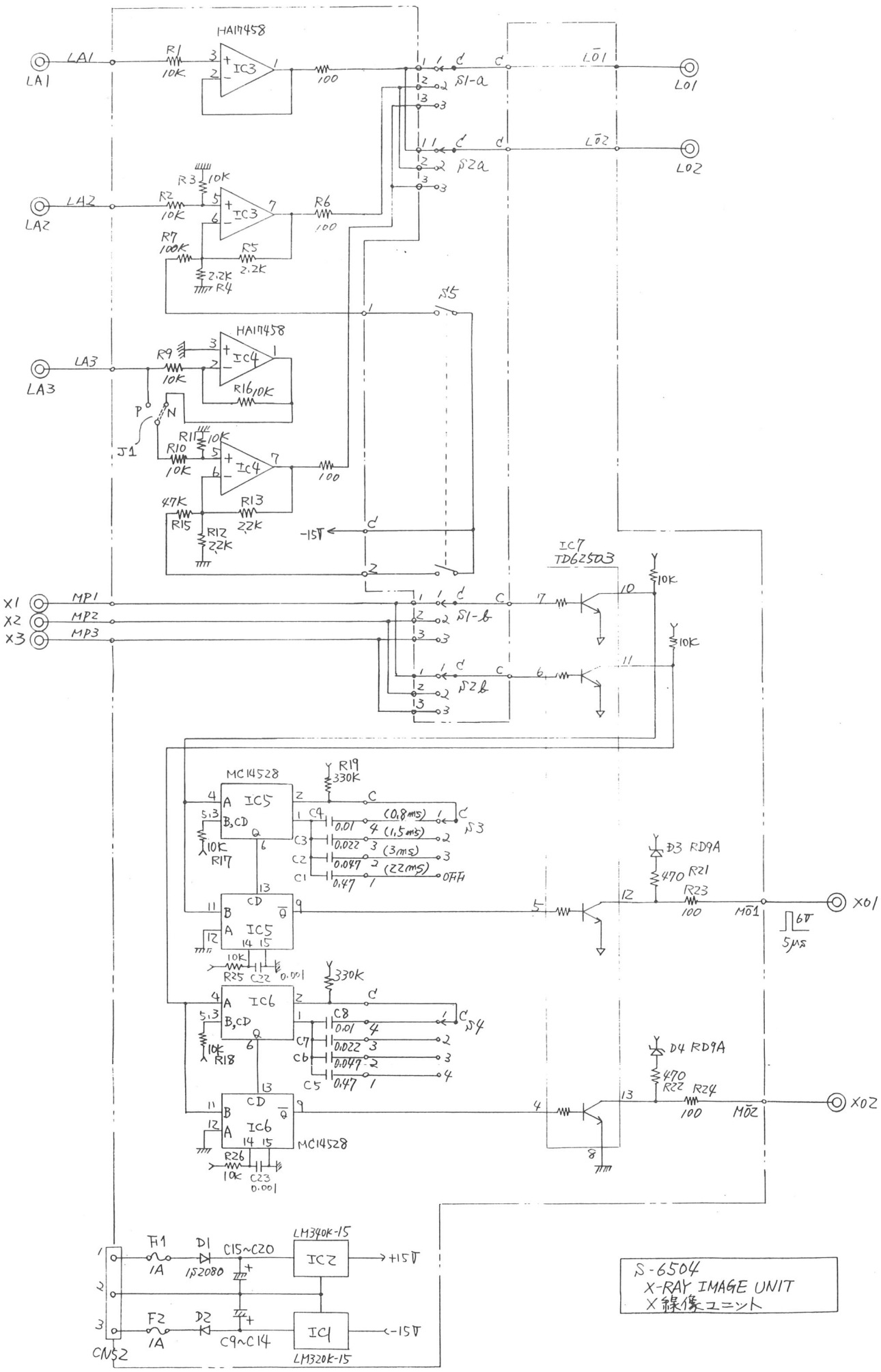

4.2 S-6504 X-RAY IMAGE UNIT

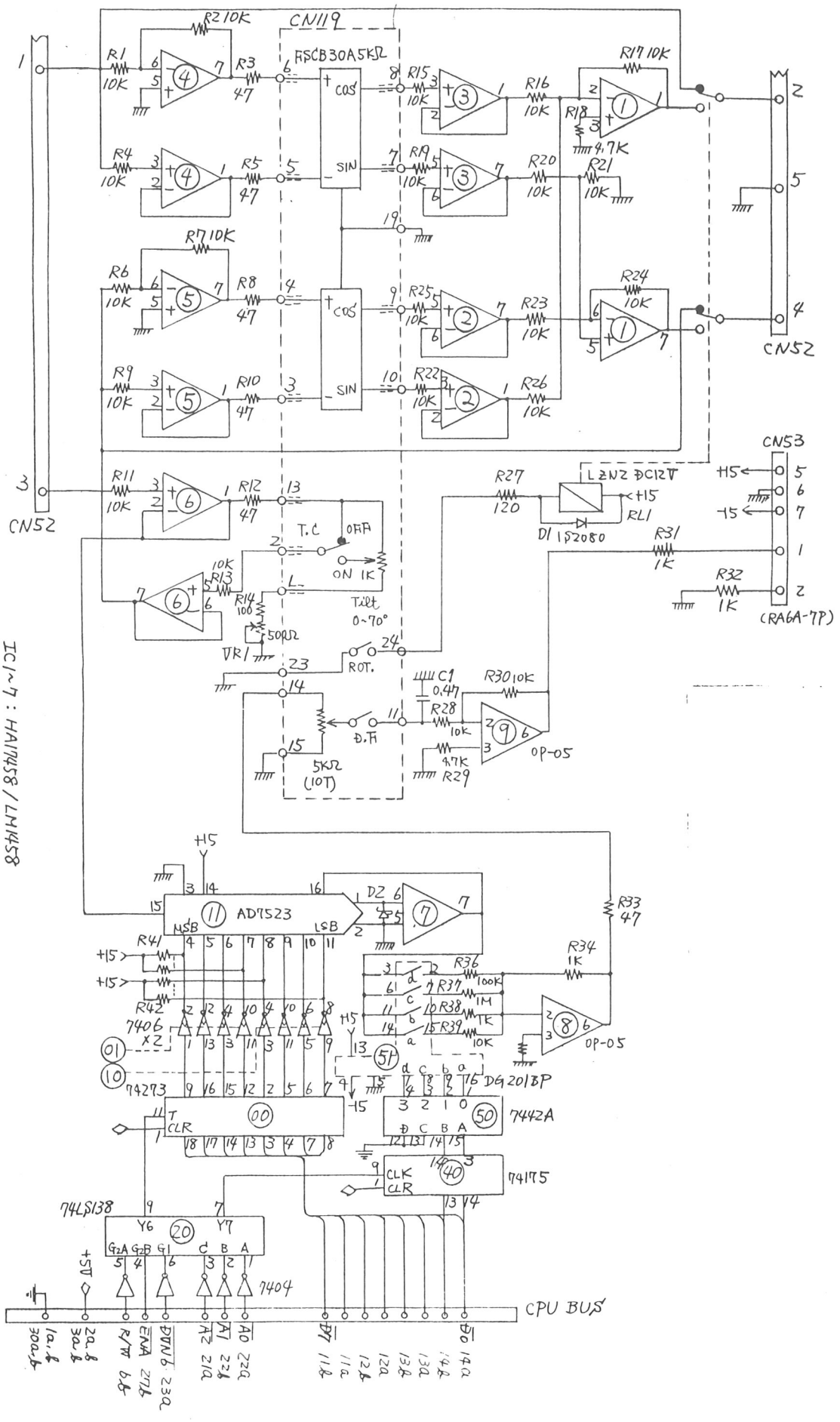

4.3 S-6509 RASTER ROTATION/DYNAMIC FOCUS UNIT

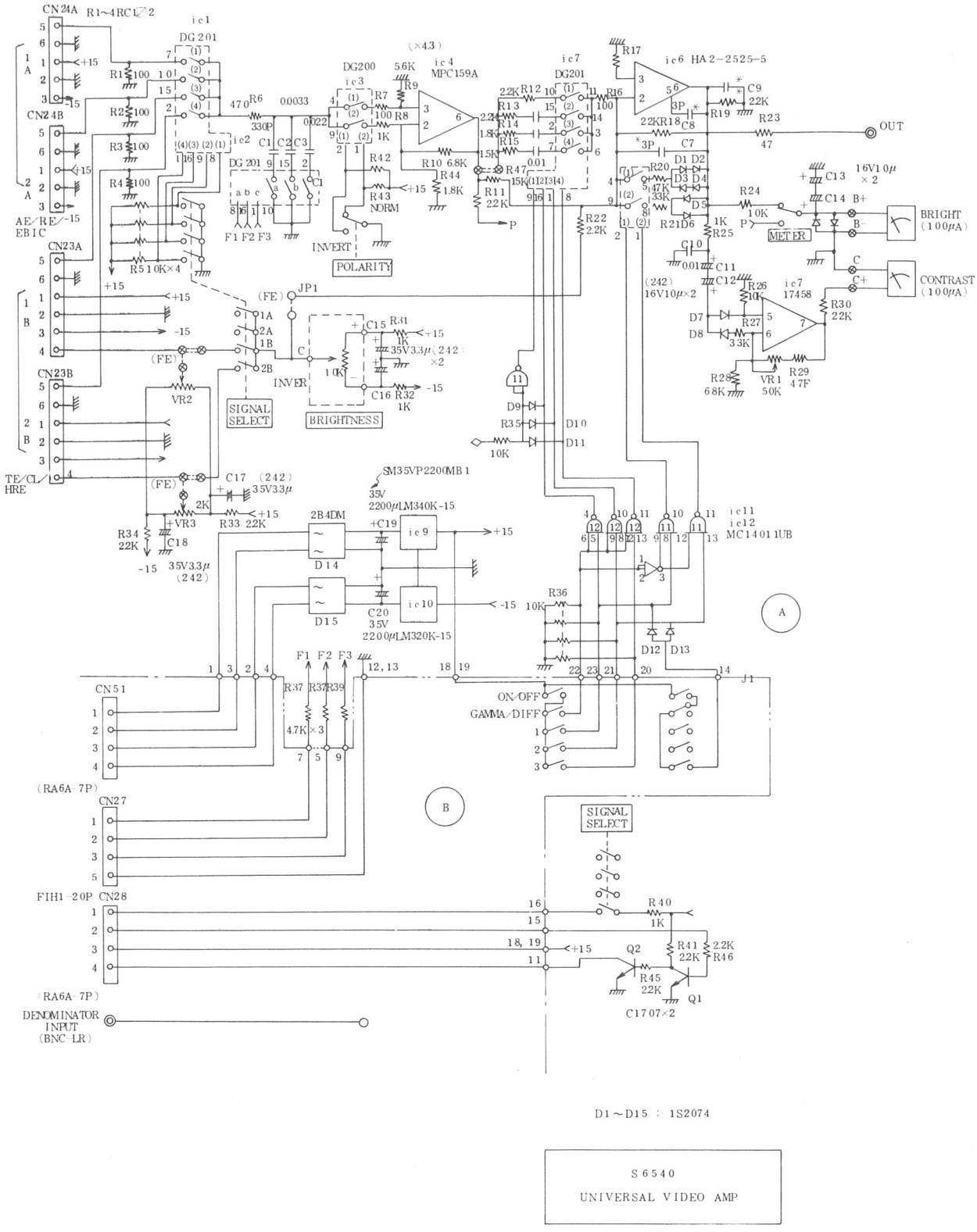

4.4 S-6540 UNIVERSAL VIDEO AMP UNIT

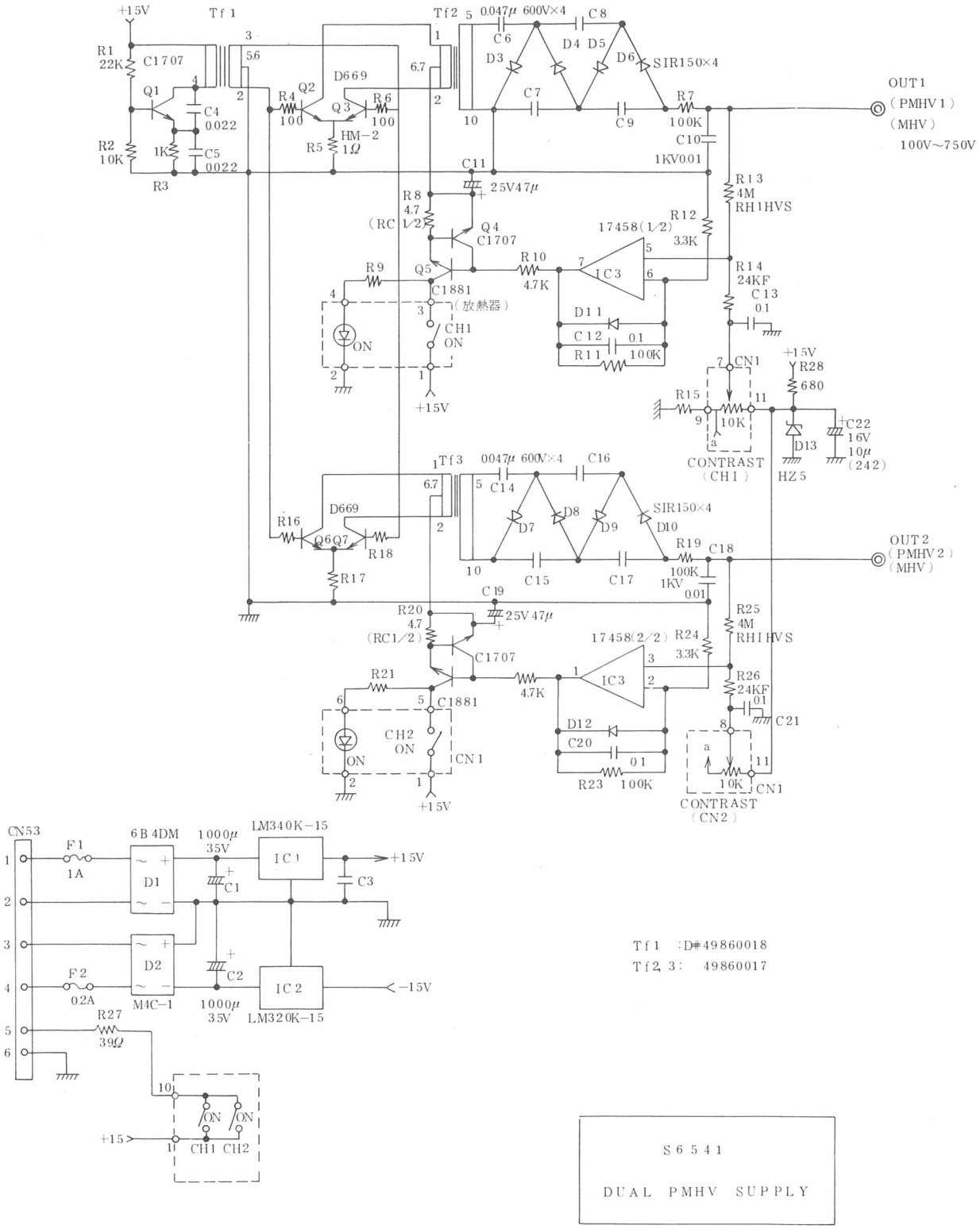

Tf1 :D#49860018
Tf2, 3: 49860017

S 6 5 4 1

DUAL PMHV SUPPLY

4.5 S-6541 DUAL PMHV UNIT

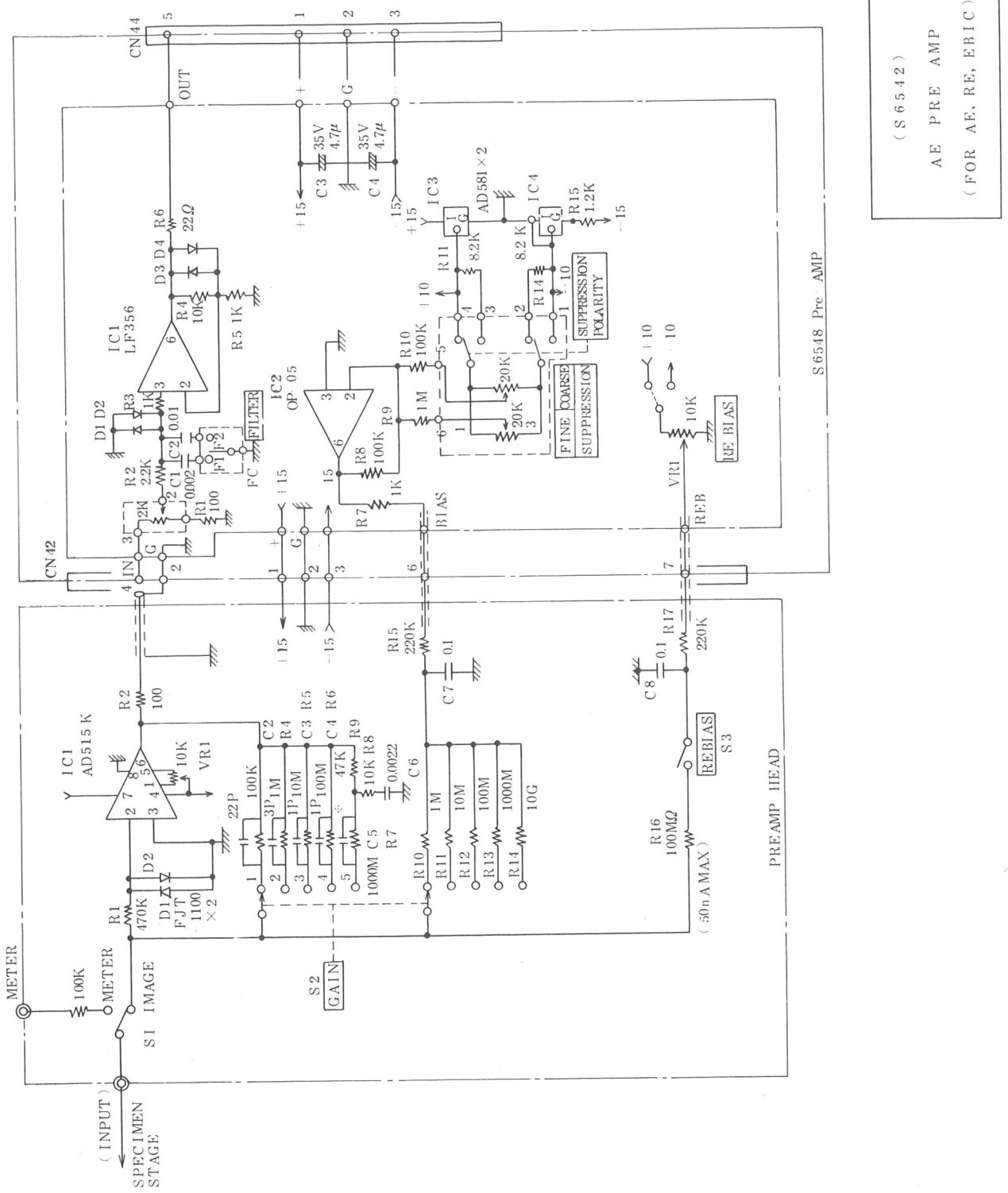

4.6 S-6542 PRE AMP UNIT

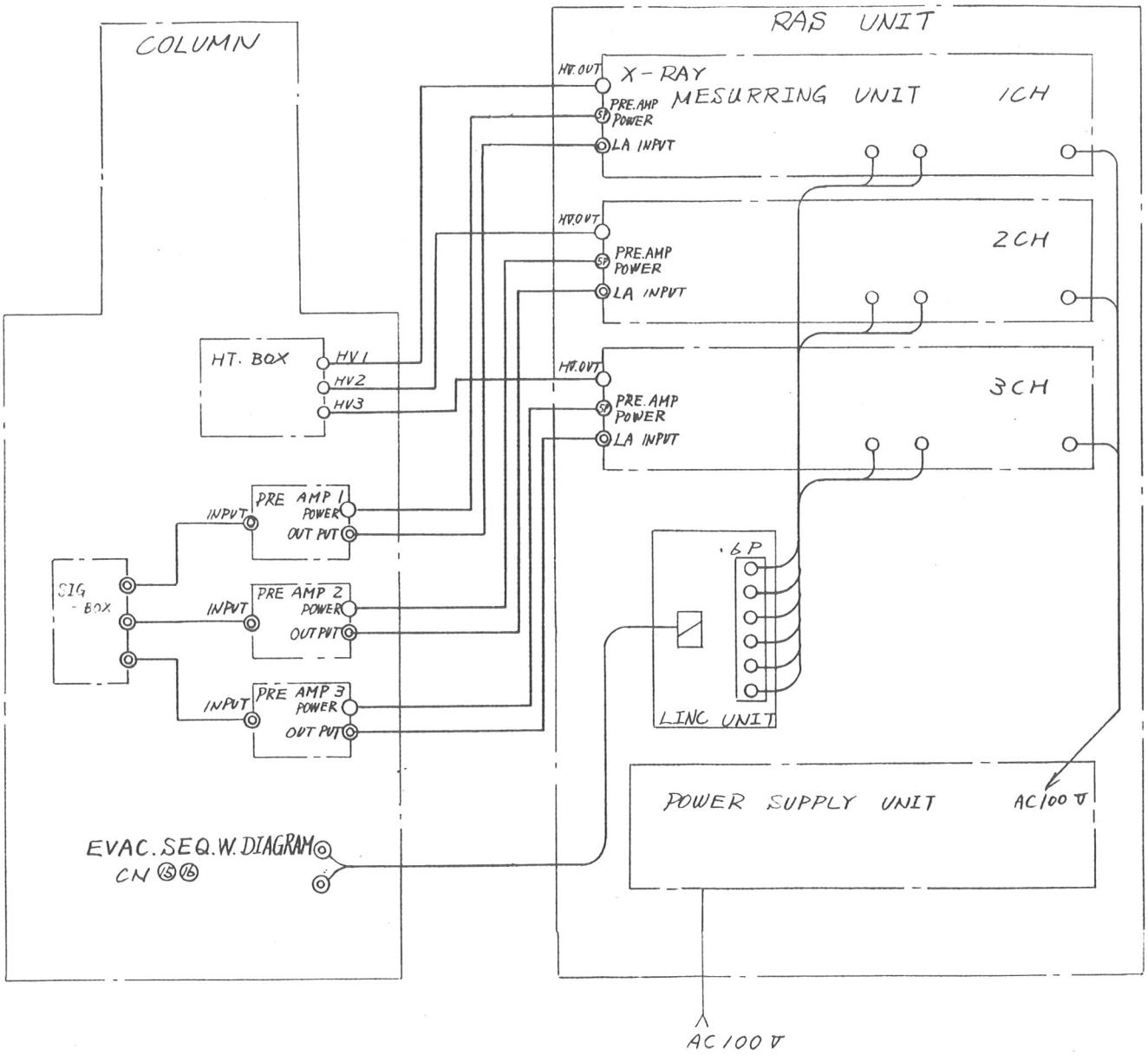

4.7 RS-200 RADIATION ANALYZING SYSTEM

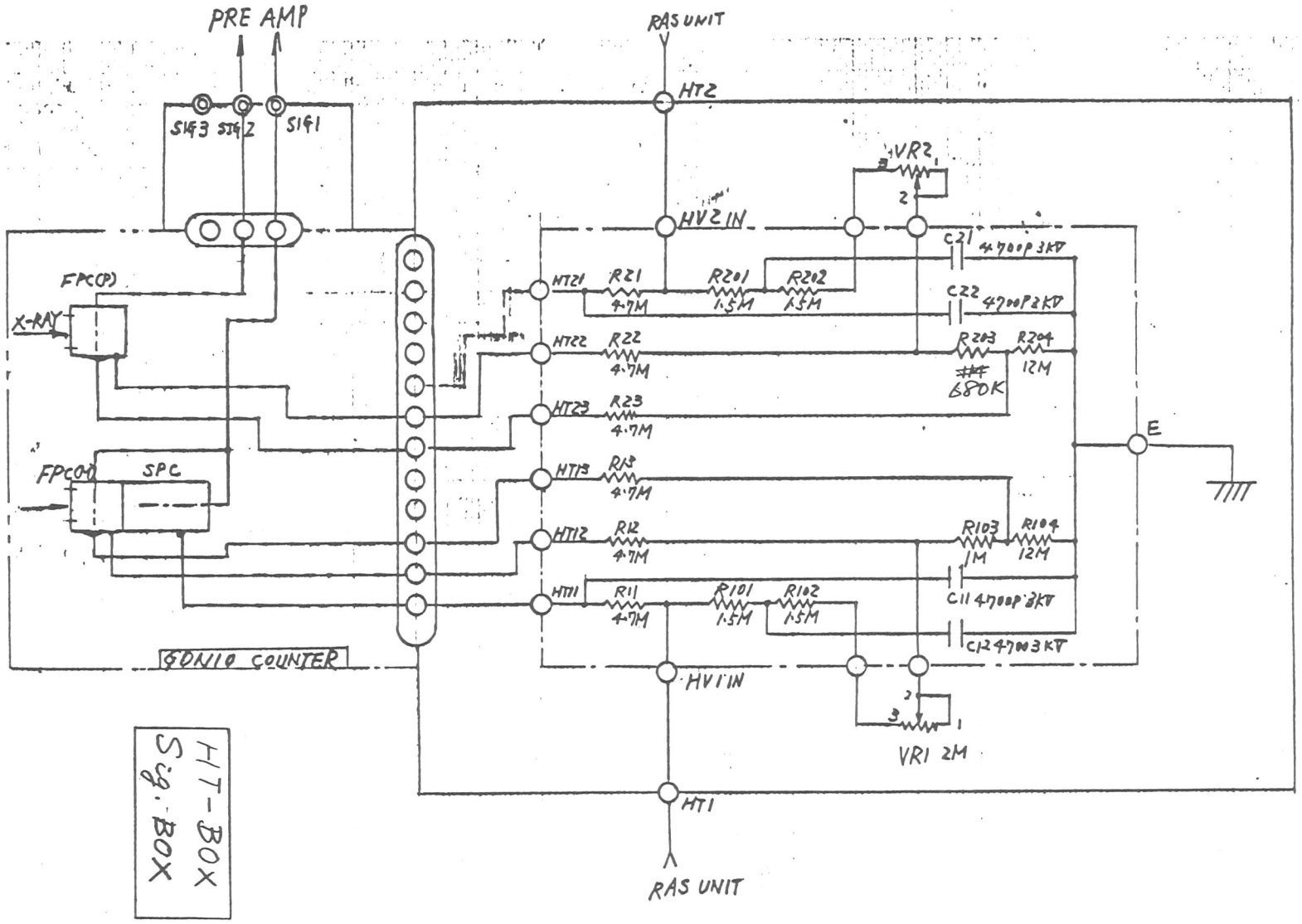

4.7.1 HT-BOX, SIG. BOX

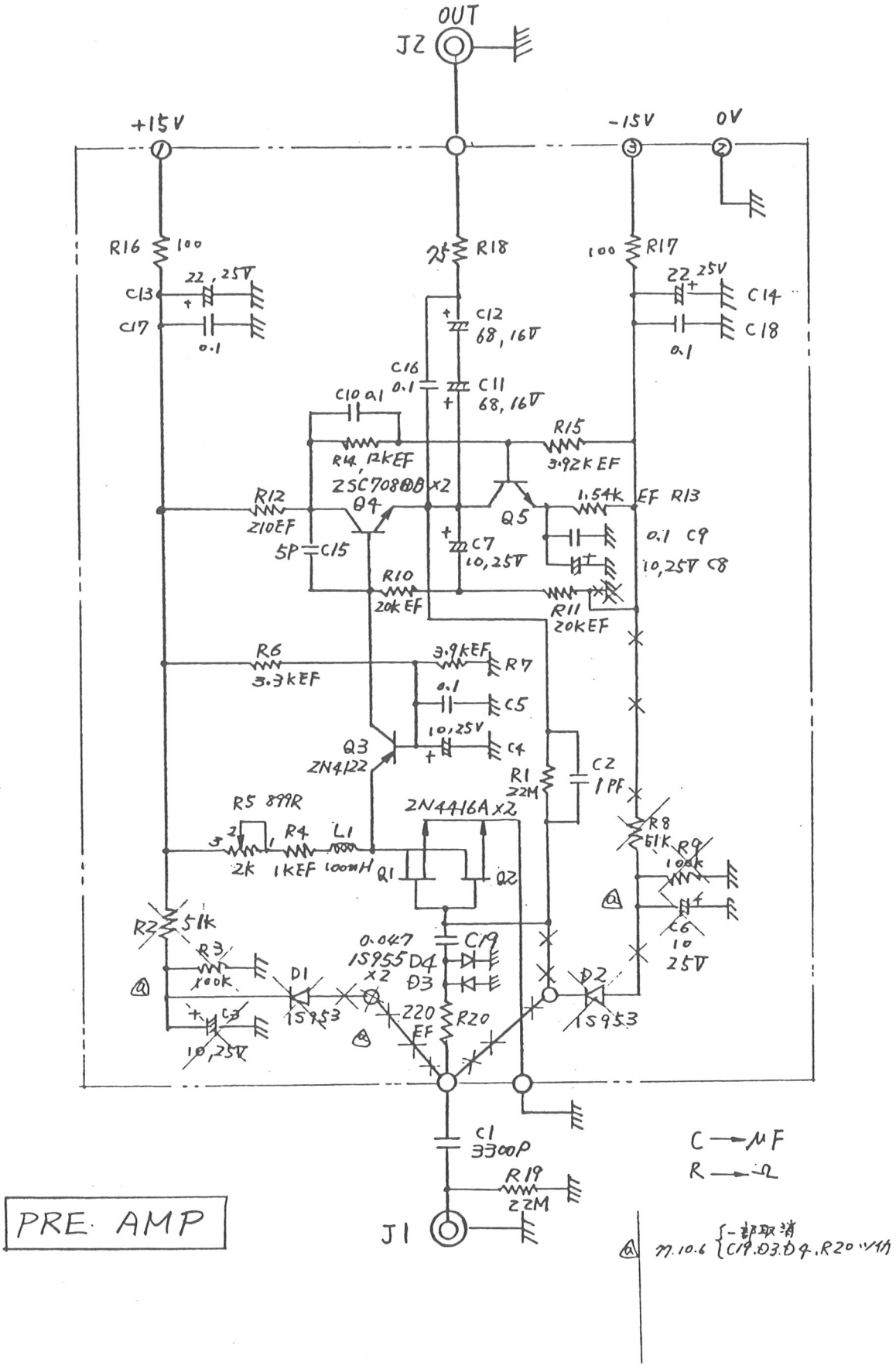
OUT
J2
+15V
-15V
0V
R16 100
R18
R17 100
C13 22, 25V
C17 0.1
C12 68, 16V
C14 22, 25V
C18 0.1
C16 0.1
C11 68, 16V
C10 0.1
R14 12KEF
R15 3.92K EF
2SC708DB x2
Q4
Q5
R12 210EF
5P C15
C7 10, 25V
1.54k EF R13
0.1 C9
10, 25V C8
R10 20k EF
R11 20KEF
R6 3.3KEF
3.9KEF R7
0.1 C5
10, 25V C4
Q3 2N4122
R1 22M
C2 1PF
R5 899R
2N4416A x2
R4 1KEF
L1 100mH
2k
Q1
Q2
R8 51K
R9 100k
C6 10 25V
R2 51k
R3 100k
C3 10, 25V
D1 1S953
0.047 1S955 x2
D4
D3
C19
220 EF
R20
D2 1S953
C1 3300P
R19 22M
J1
C → μF
R → Ω
PRE AMP
77.10.6 {一部取消 C19.D3.D4.R20 ツイカ

4.7.2 PRE AMP

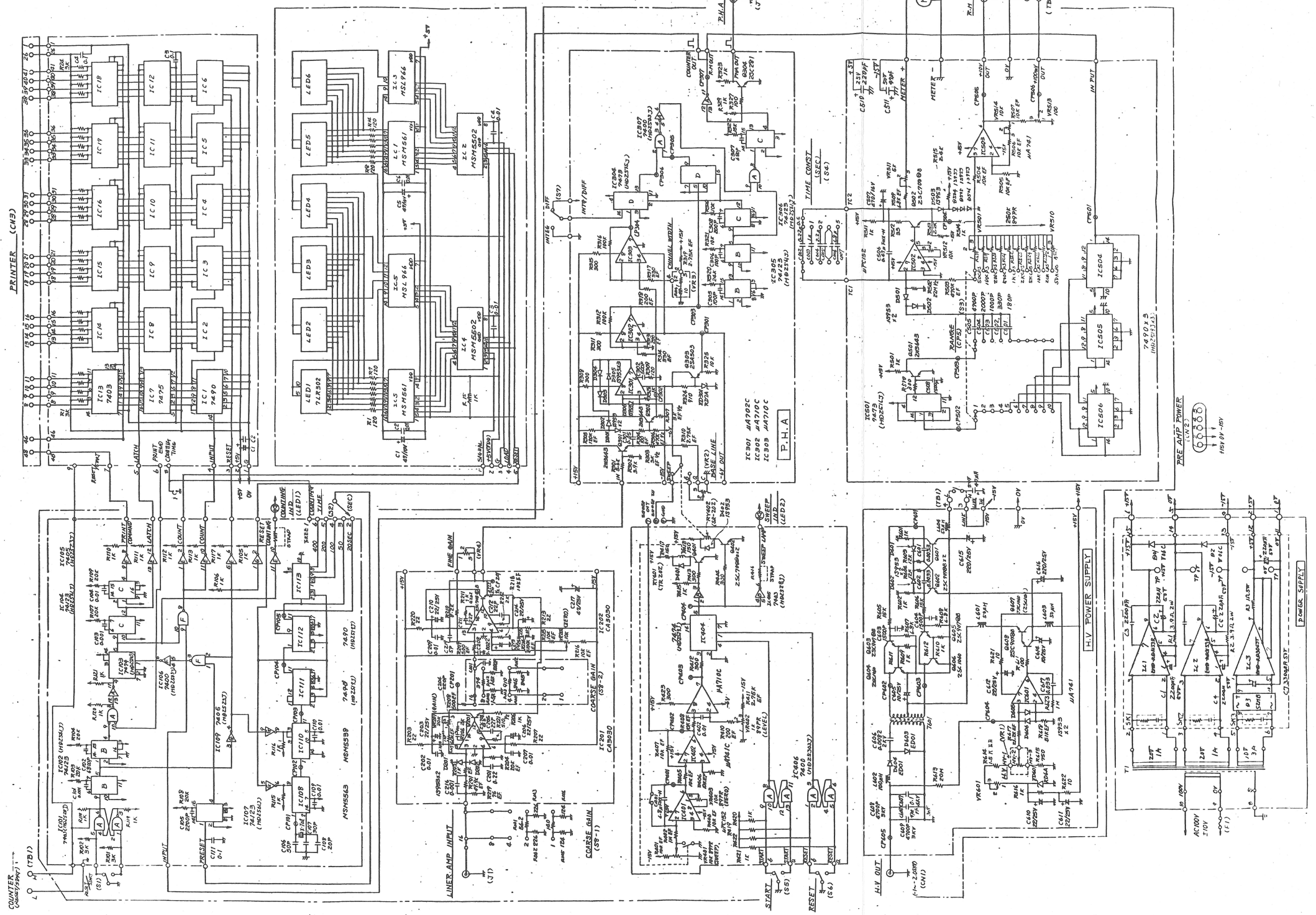

4.7.3 S-6091 X-RAY MEASURING UNIT

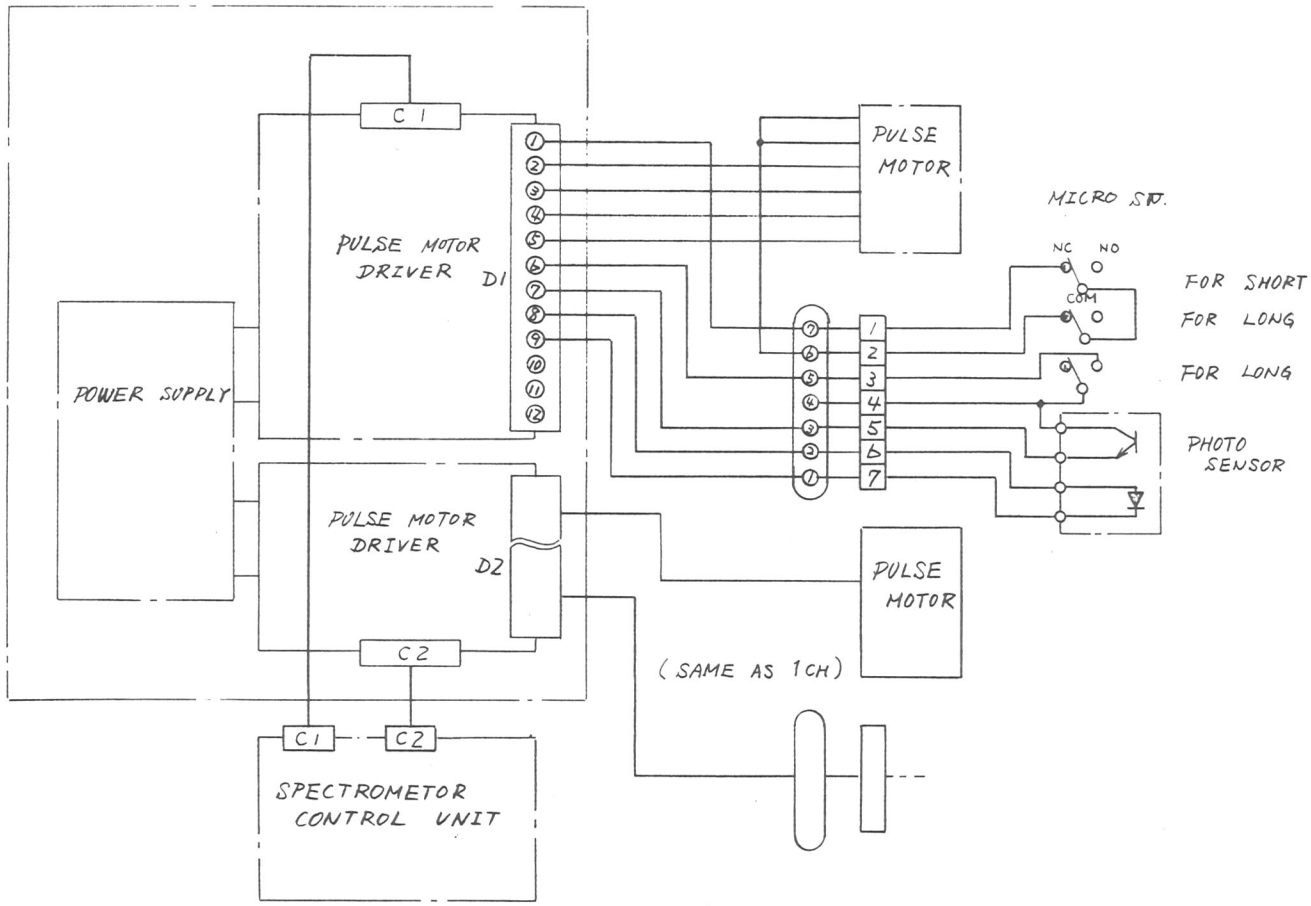

4.8 SPECTROMETER CONTROLLER

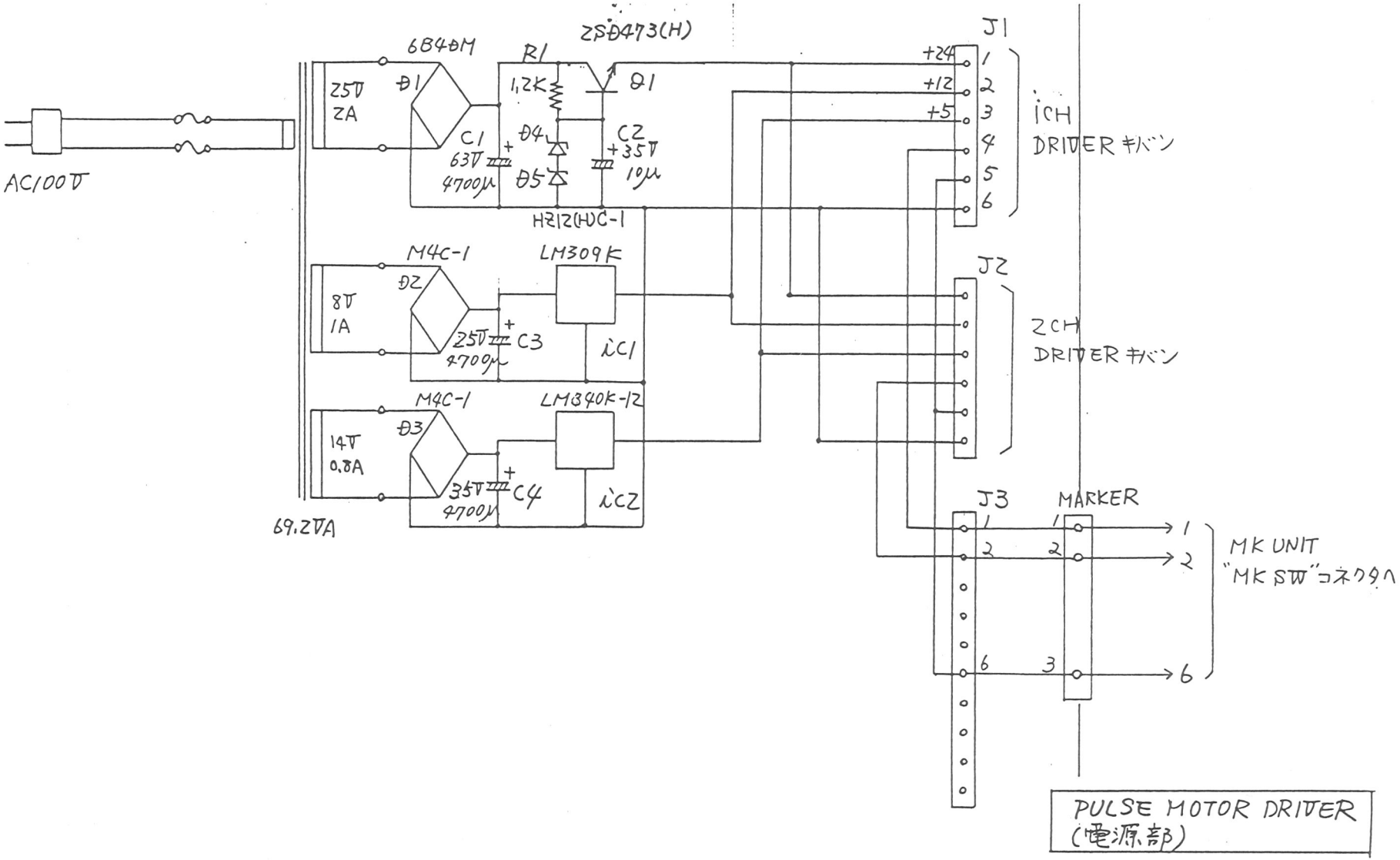

4.8.1 PULSE MOTOR DRIVER

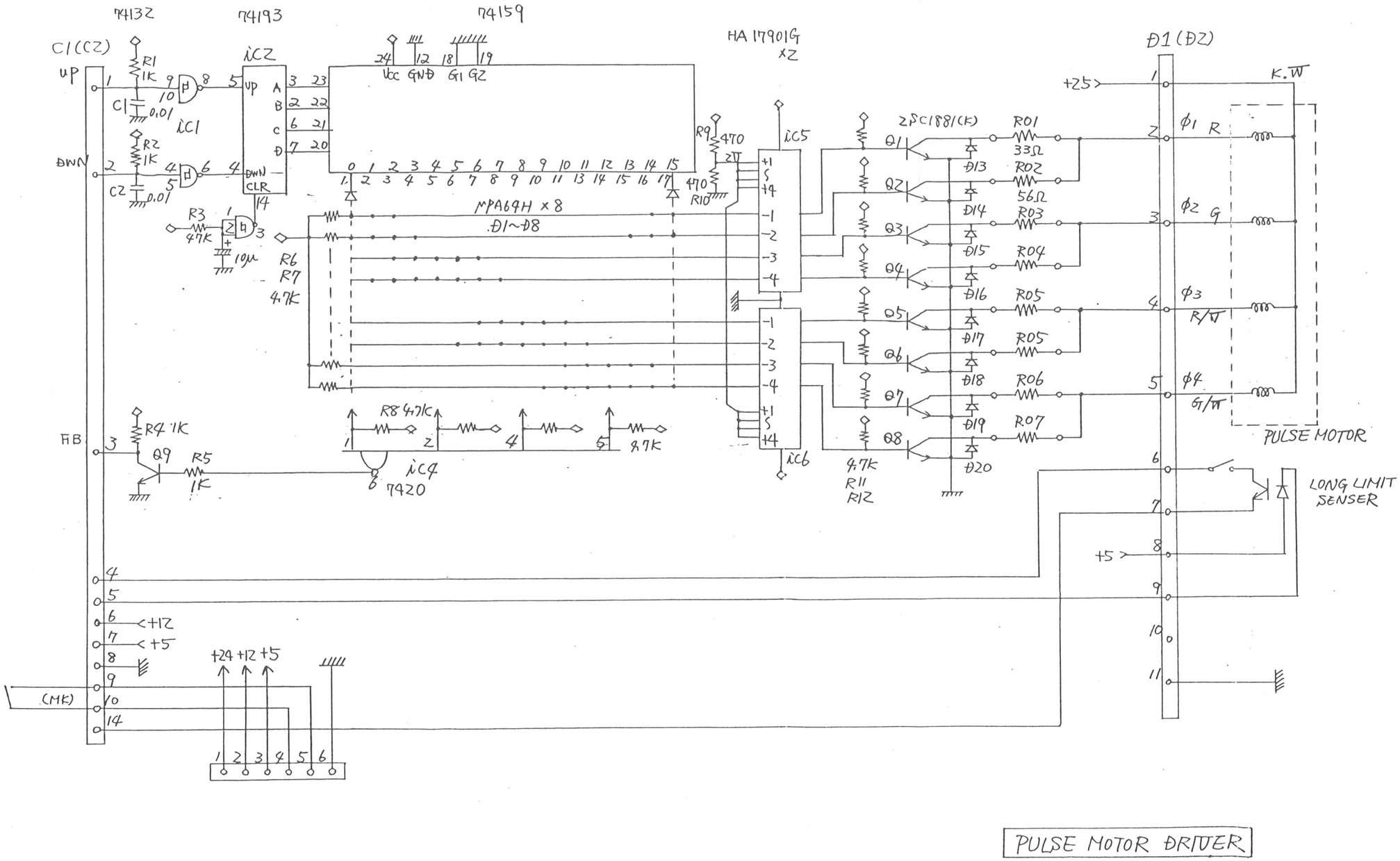

PULSE MOTOR DRIVER

4.8.2 PULSE MOTOR DRIVER

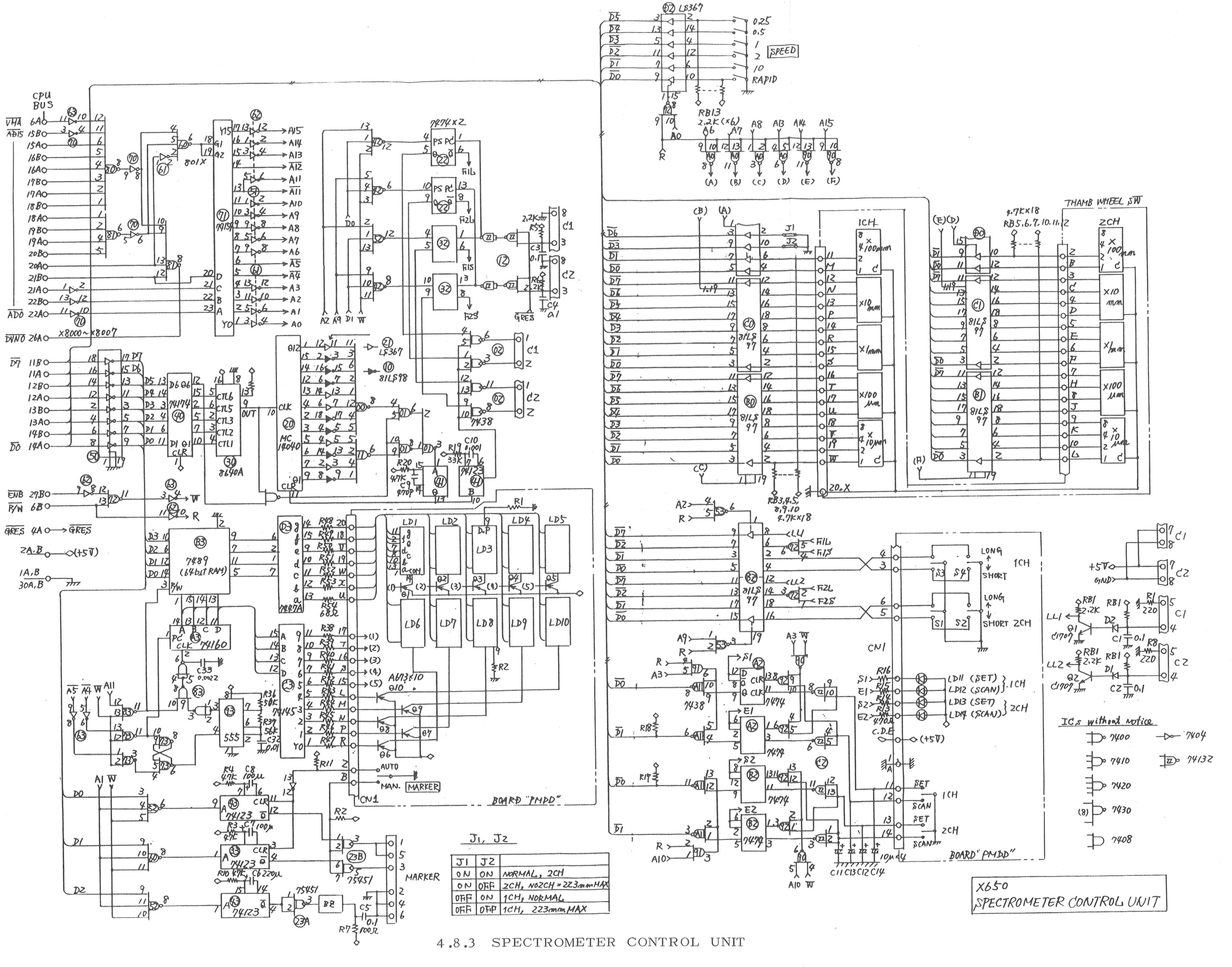

J1	J2	
ON	ON	NORMAL, 2CH
ON	OFF	2CH, NO2CH=223mm MAX
OFF	ON	1CH, NORMAL
OFF	OFF	1CH, 223mm MAX

J1, J2

4.8.3 SPECTROMETER CONTROL UNIT

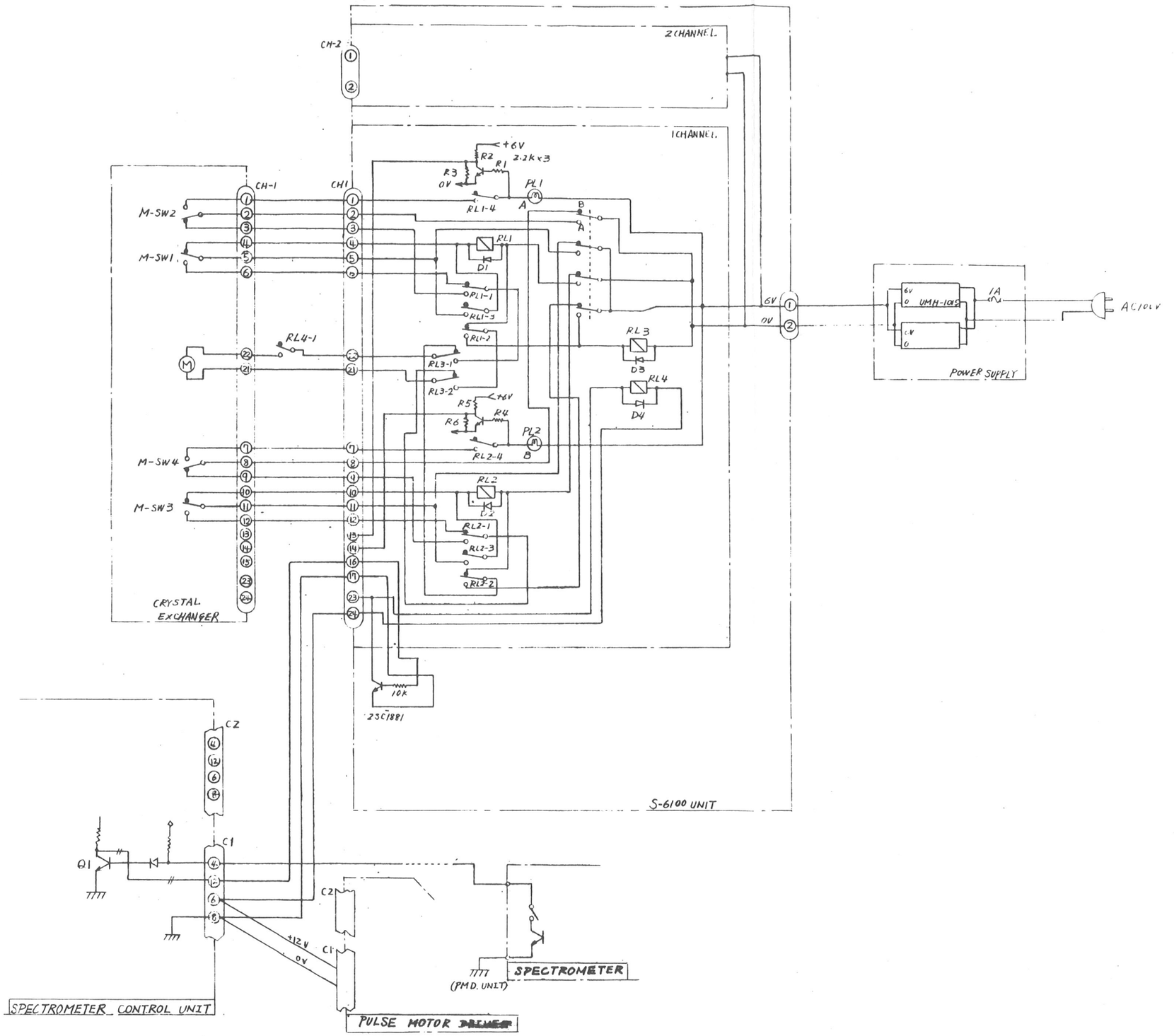

4.9 S-6529 AUTOMATIC CRYSTAL EXCHANGE UNIT

Hitachi, Ltd. Tokyo Japan

Head Office: 5-1, 1-chome, Marunouchi, Chiyoda-ku, Tokyo

Tel. Tokyo (212)1111, 1510, 1520. (211) 1411, (270) 2111.

Cable Address: "HITACHY„ TOKYO

Codes: All Codes Used

Copyright 1982-Hitachi, Ltd.
All rights reserved
Printed in Japan